THERMA-TRU® DOORS

Fiber-Classic® & Smooth-Star®

COMPOSITE EDGE GLAZED FIBERGLASS DOUBLE DOOR w/ or w/out SIDELITES

INSWING/OUTSWING "NON-IMPACT"

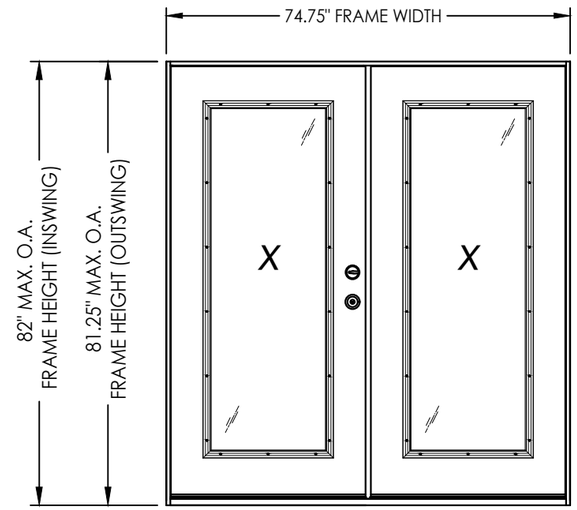

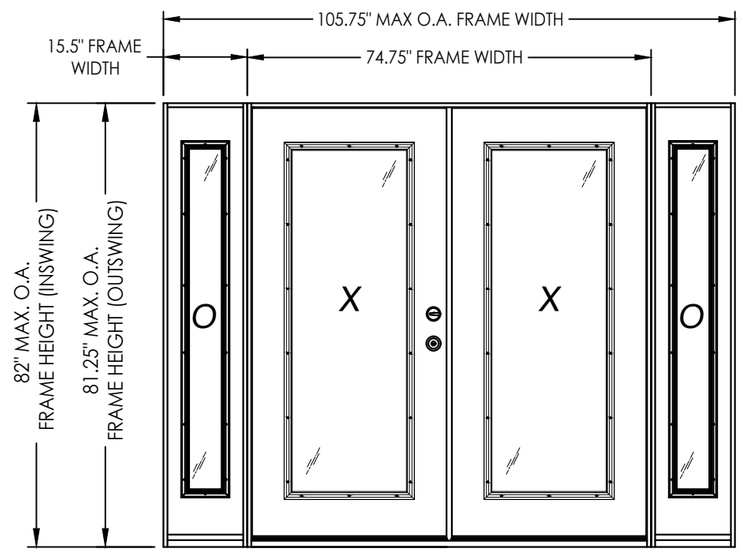

Digitally signed by Lyndon F Schmidt
Date: 2026.08.05 11:51:52 -04'00'

This item has been digitally signed and sealed by **L. F. Schmidt, P.E.** on the date adjacent to the seal.

Printed copies of this document are not considered signed and sealed and the signature must be verified on any electronic copies.

THIS PRODUCT APPROVAL IS VALID ONLY FOR THE STATE OF FLORIDA

GENERAL NOTES

1. This product has been evaluated and is in compliance with the 9th Edition (2026) Florida Building Code (FBC) structural requirements excluding the "High Velocity Hurricane Zone" (HVHZ).
2. Product anchors shall be as listed and spaced as shown on details. Anchor embedment to base material shall be beyond wall dressing or stucco.
3. When used in areas requiring wind borne debris protection, this product is required to be protected with an impact resistant covering that complies with FBC Sections 1609.1.2 & R301.2.1.2.
4. For 2x stud framing construction, anchoring of these units shall be the same as that shown for 2x buck masonry construction.
5. Site conditions that deviate from the details of this drawing require further engineering analysis by a licensed engineer or registered architect.
6. Fiber-Classic & Smooth-Star Door and Sidelite panels require the use of "J" part numbers and must be stained or painted within six months of installation.

TABLE OF CONTENTS

SHEET #	DESCRIPTION	SHEET #	DESCRIPTION
1	Typical Elevations, Design Pressures & General Notes	9	Vertical Cross Sections (Thresholds)
2	Door Panel Details	10	Buck Anchoring
3	Door Panel Details	11	Frame Anchoring
4	Sidelite Panel Details	12	Hardware Details
5	Elevations	13	Glazing details
6	Horizontal & Vertical Cross Sections (2X Buck)	14	Components
7	Horizontal & Vertical Cross Sections (1X Buck)	15	Bill of Materials
8	Horizontal & Vertical Cross Sections (Direct to Masonry)		

CONFIGURATION	ASTRAGAL	DESIGN PRESSURE (PSF) INSWING		DESIGN PRESSURE (PSF) OUTSWING	
		POSITIVE	NEGATIVE	POSITIVE	NEGATIVE
XX, OXXO	STANDARD	+40.0	-40.0	+40.0	-40.0
XX, OXXO	COASTAL	+50.0	-50.0	+50.0	-50.0

See Sheet 5 for Hardware Specifications

Documents Prepared By:
Lyndon F. Schmidt
P.E. No. 43409

RW BUILDING CONSULTANTS, INC.
P.O. Box 230, Valrico, FL 33595
Phone No.: 813.659.9197
FBPE Registry No. 9813

PRODUCT: THERMA-TRU FIBERGLASS DOOR

PART OR ASSEMBLY: TYPICAL ELEVATION, DESIGN PRESSURES & GENERAL NOTES

NO.	DATE	REVISIONS	BY
6	7/03/26	UPDATE TO 9TH ED. (2026) FBC	LFS
5	7/19/23	UPDATE TO 8TH ED. (2023) FBC	LFS
4	7/21/20	UPDATE TO 7th ED (2020) FBC	LFS

DATE: 6/1/16
SCALE: N.T.S.
DWG. BY: JK
CHK. BY: LFS
DRAWING NO.: FL-20461.11
SHEET 1 OF 15

© 2016 R.W. BUILDING CONSULTANTS INC.

Z:\2023 FBC Drawings\Therma-Tru\FL-20461 R10\FL-20461.9-13.dwg

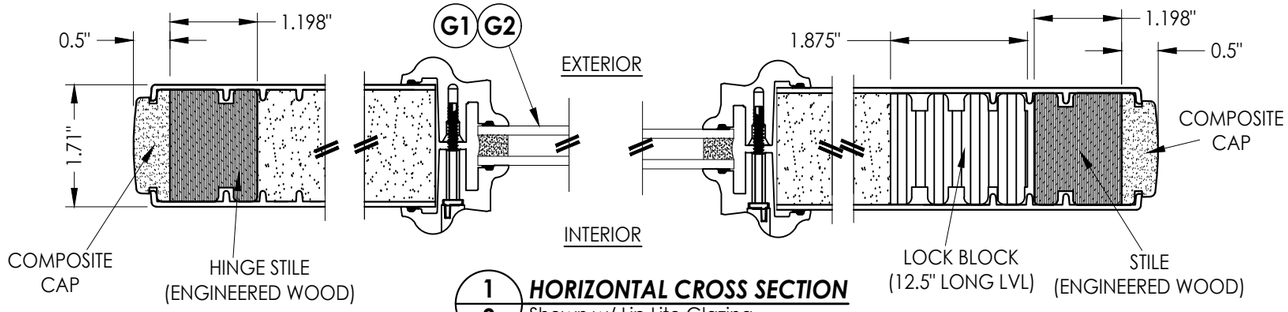

1/2 **HORIZONTAL CROSS SECTION**
Shown w/ Lip Lite Glazing

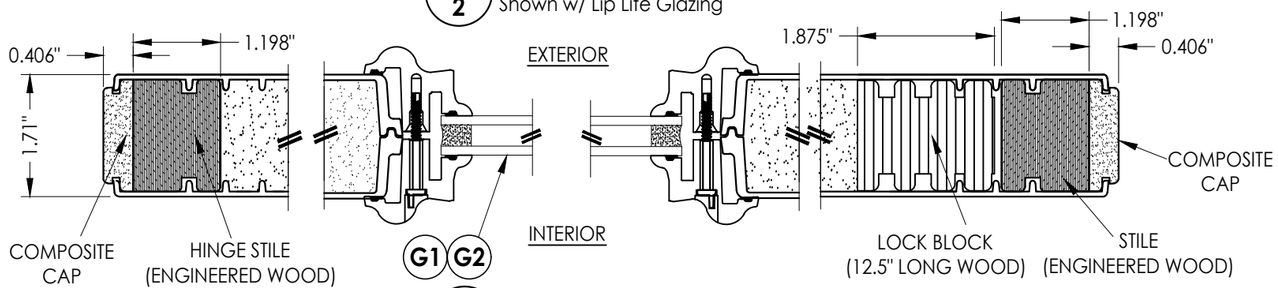

2/2 **HORIZONTAL CROSS SECTION**
Shown w/ Molded Open Lip Lite Glazing

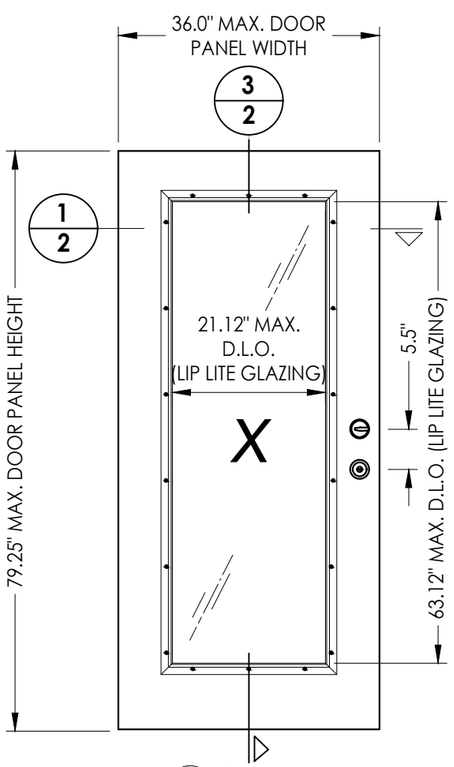

40 **DOOR PANEL**
BOOK

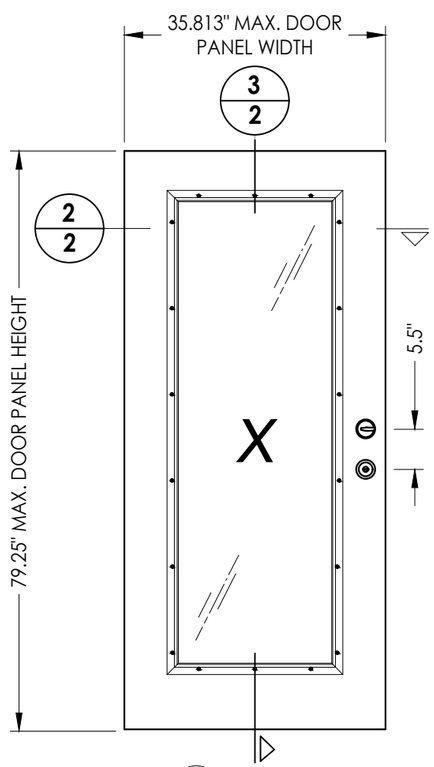

41 **DOOR PANEL**
Hybrid Door

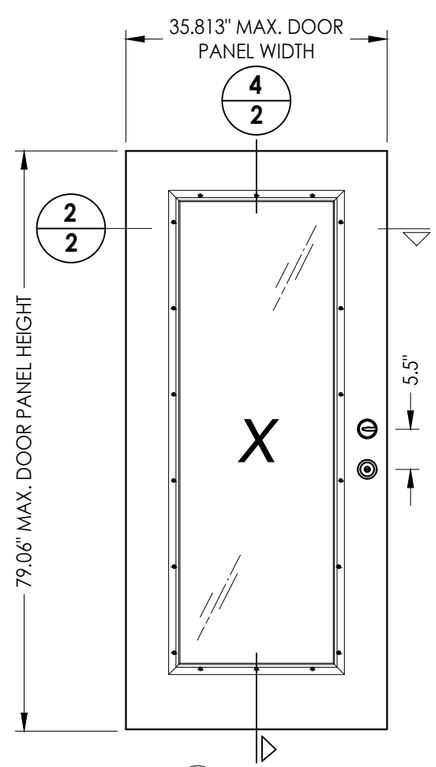

42 **DOOR PANEL**
U1 Door

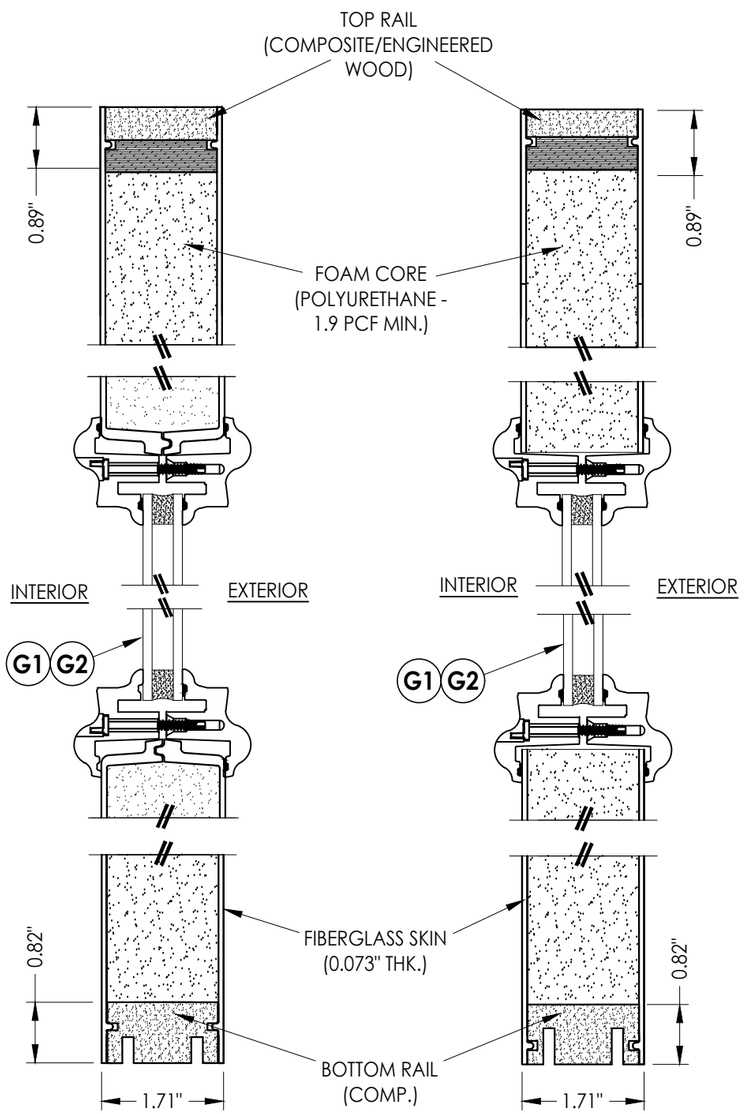

3/2 **VERTICAL CROSS SECTION**
Shown w/ Molded Open Lip Lite Glazing

4/2 **VERTICAL CROSS SECTION**
Shown w/ Lip Lite Glazing

Documents Prepared By:
Lyndon F. Schmidt
P.E. No. 43409

R.W. BUILDING CONSULTANTS, INC.
P.O. Box 230, Valrico, FL 33595
Phone No.: 813.659.9197
FBPE Registry No. 9813

PRODUCT: THERMA-TRU FIBERGLASS DOOR

PART OR ASSEMBLY: DOOR PANEL DETAILS

NO.	DATE	BY
6	7/03/26	UPDATE TO 9TH ED. (2026) FBC	LFS
5	7/19/23	UPDATE TO 8TH ED. (2023) FBC	LFS
4	7/21/20	UPDATE TO 7th ED (2020) FBC	LFS

REVISIONS

DATE: 6/1/16
SCALE: N.T.S.
DWG. BY: JK
CHK. BY: LFS
DRAWING NO.: FL-20461.11
SHEET 2 OF 15

© 2016 R.W. Building Consultants Inc.

Z:\2023 FBC Drawings\Therma-Tru\FL-20461 R10\FL-20461.9-13.dwg

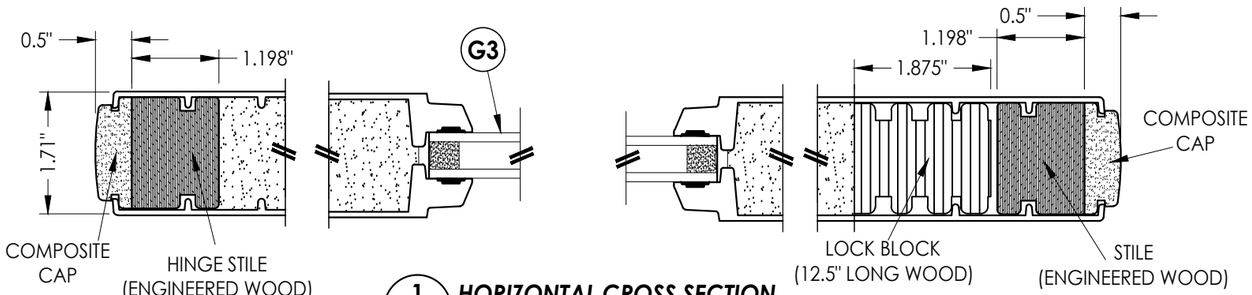

1/3 **HORIZONTAL CROSS SECTION**
Shown w/ Flush Glazing

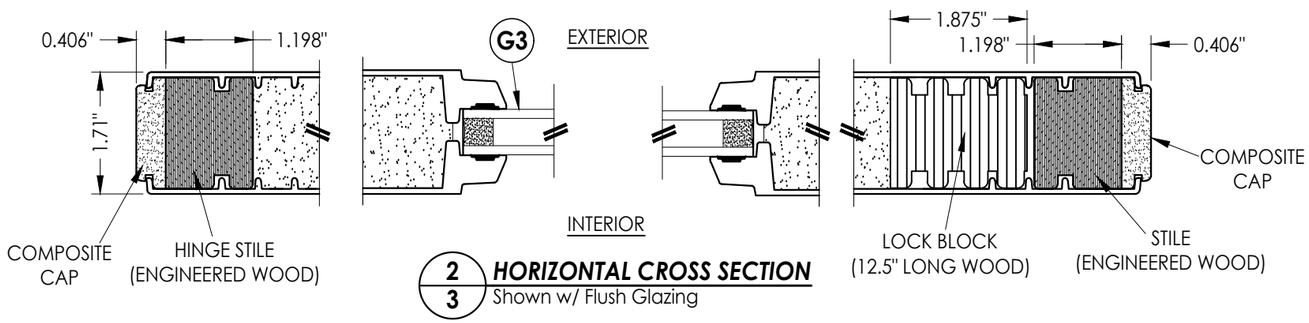

2/3 **HORIZONTAL CROSS SECTION**
Shown w/ Flush Glazing

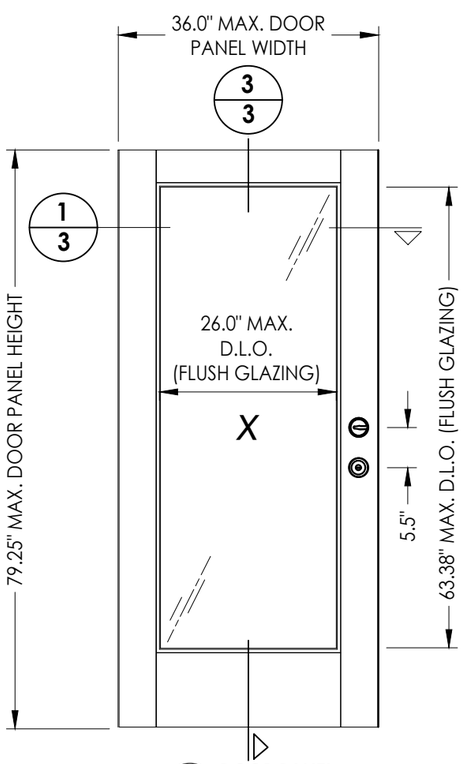

43 **DOOR PANEL**
BOOK

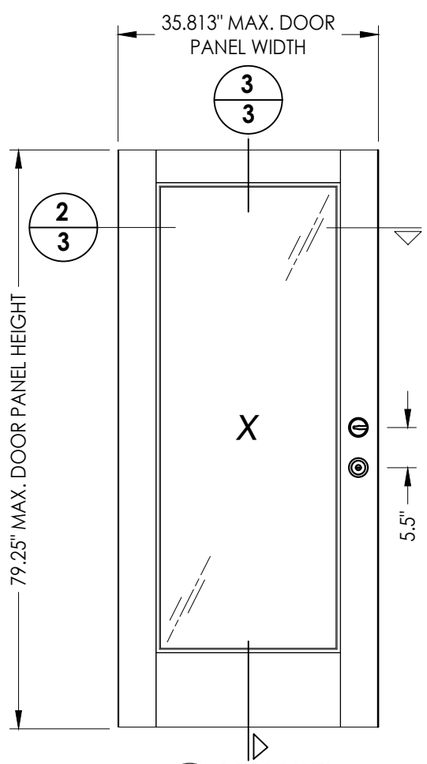

44 **DOOR PANEL**
Hybrid Door

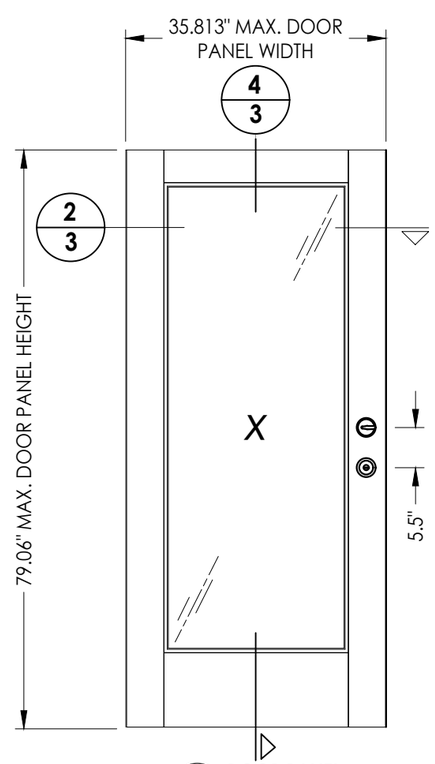

45 **DOOR PANEL**
U1 Door

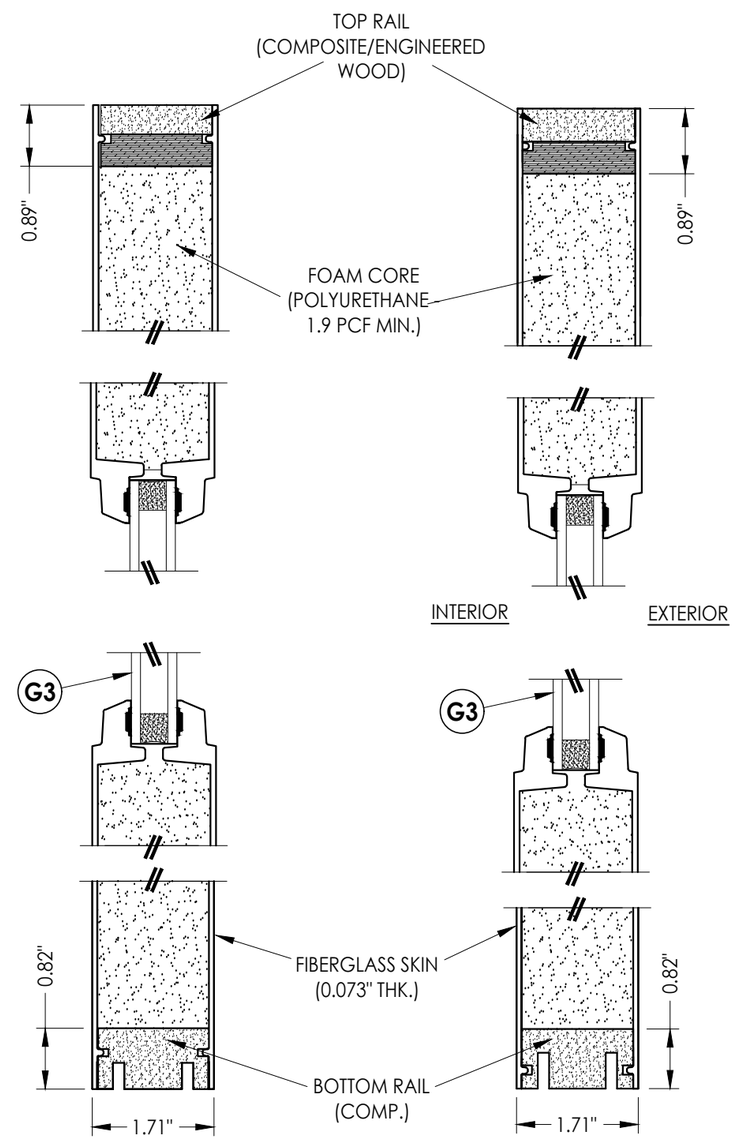

3/3 **VERTICAL CROSS SECTION**
Shown w/ Flush Glazing

4/3 **VERTICAL CROSS SECTION**
Shown w/ Flush Glazing

Documents Prepared By:
Lyndon F. Schmidt
P.E. No. 43409

R.W. BUILDING CONSULTANTS, INC.
P.O. Box 230, Valrico, FL 33595
Phone No.: 813.659.9197
FBPE Registry No. 9813

PRODUCT: THERMA-TRU FIBERGLASS DOOR

PART OR ASSEMBLY: DOOR PANEL DETAILS

REVISIONS

NO.	DATE		BY
6	7/03/26	UPDATE TO 9TH ED. (2026) FBC	LFS
5	7/19/23	UPDATE TO 8TH ED. (2023) FBC	LFS
4	7/21/20	UPDATE TO 7th ED (2020) FBC	LFS

DATE: 6/1/16
SCALE: N.T.S.
DWG. BY: JK
CHK. BY: LFS
DRAWING NO.: FL-20461.11
SHEET 3 OF 15

© 2016 R.W. Building Consultants Inc.

Z:\2023 FBC Drawings\Therma-Tru\FL-20461 R10\FL-20461.9-13.dwg

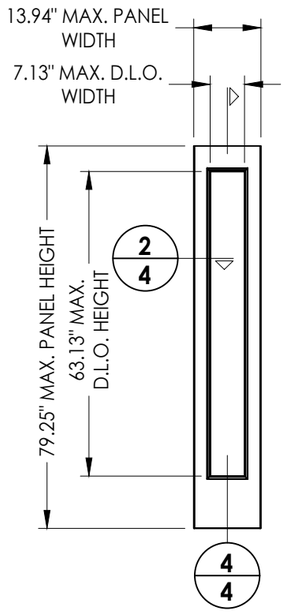

60 ***SIDELITE PANEL***
Full Lite
Flush Glazed

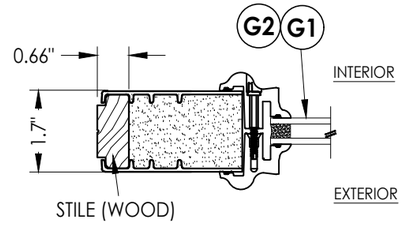

1/4 ***HORIZONTAL CROSS SECTION***
Lip Lite Glazing

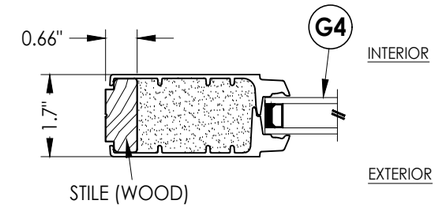

2/4 ***HORIZONTAL CROSS SECTION***
Flush Glazing

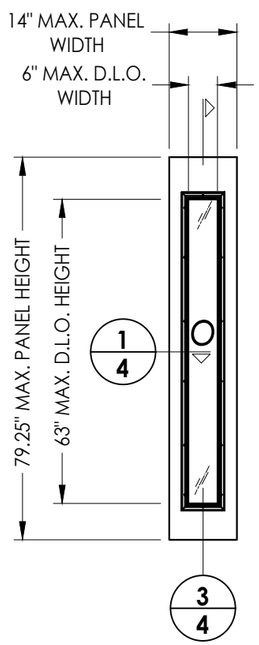

50 ***SIDELITE PANEL***
Full Lite
Lip Lite

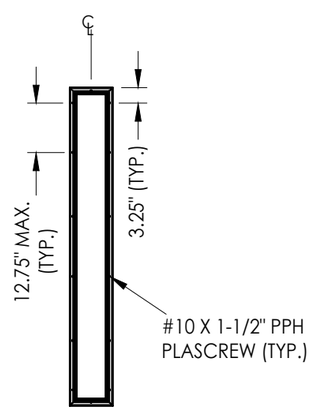

BTS FULL LITE FRAME

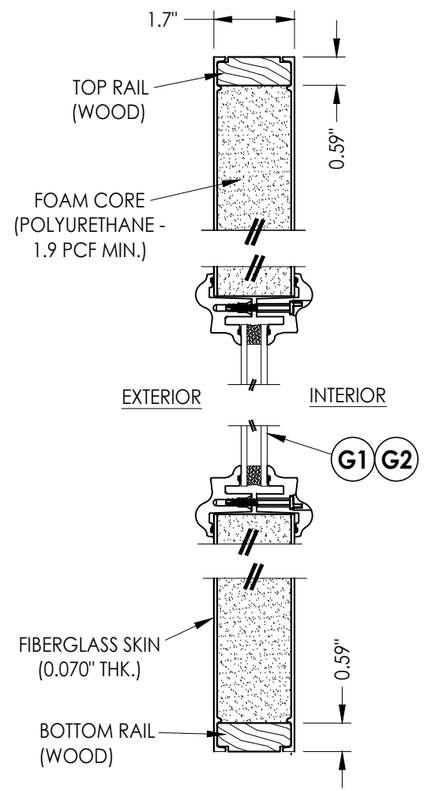

3/4 ***VERTICAL CROSS SECTION***
Lip Lite Glazing Shown

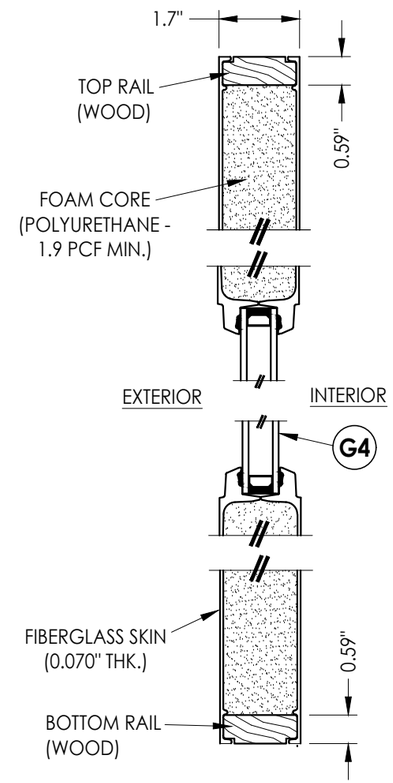

4/4 ***VERTICAL CROSS SECTION***
Flush Glazing Shown

Documents Prepared By:
Lyndon F. Schmidt
P.E. No. 43409

R.W. BUILDING CONSULTANTS, INC.
P.O. Box 230, Valrico, FL 33595
Phone No.: 813.659.9197
FBPE Registry No. 9813

PRODUCT: *THERMA-TRU FIBERGLASS DOOR*

PART OR ASSEMBLY: *SIDELITE PANEL DETAILS*

REVISIONS

NO.	DATE		BY
6	7/03/26	UPDATE TO 9TH ED. (2026) FBC	LFS
5	7/19/23	UPDATE TO 8TH ED. (2023) FBC	LFS
4	7/21/20	UPDATE TO 7th ED (2020) FBC	LFS

DATE: 6/1/16
SCALE: N.T.S.
DWG. BY: JK
CHK. BY: LFS
DRAWING NO.: FL-20461.11
SHEET 4 OF 15

© 2016 R.W. Building Consultants Inc.

Z:\2023 FBC Drawings\Therma-Tru\FL-20461 R10\FL-20461.9-13.dwg

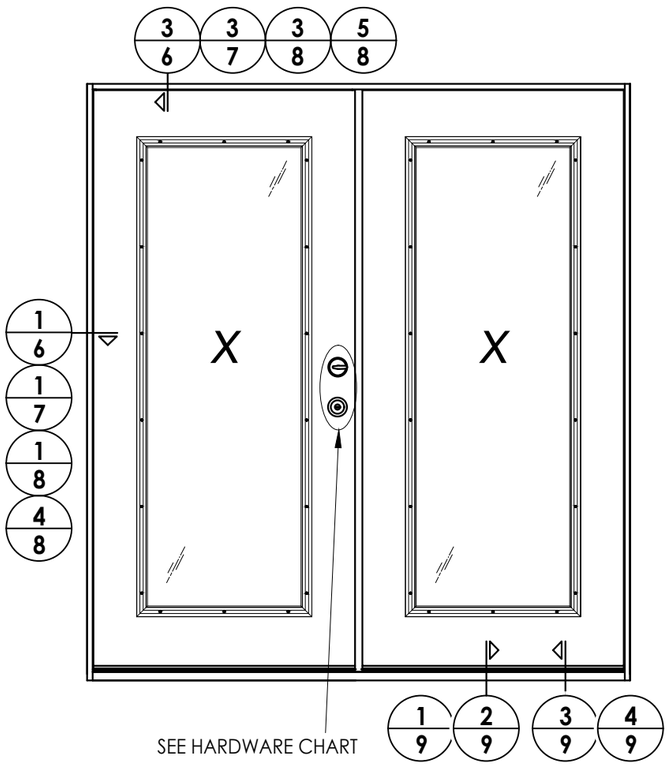

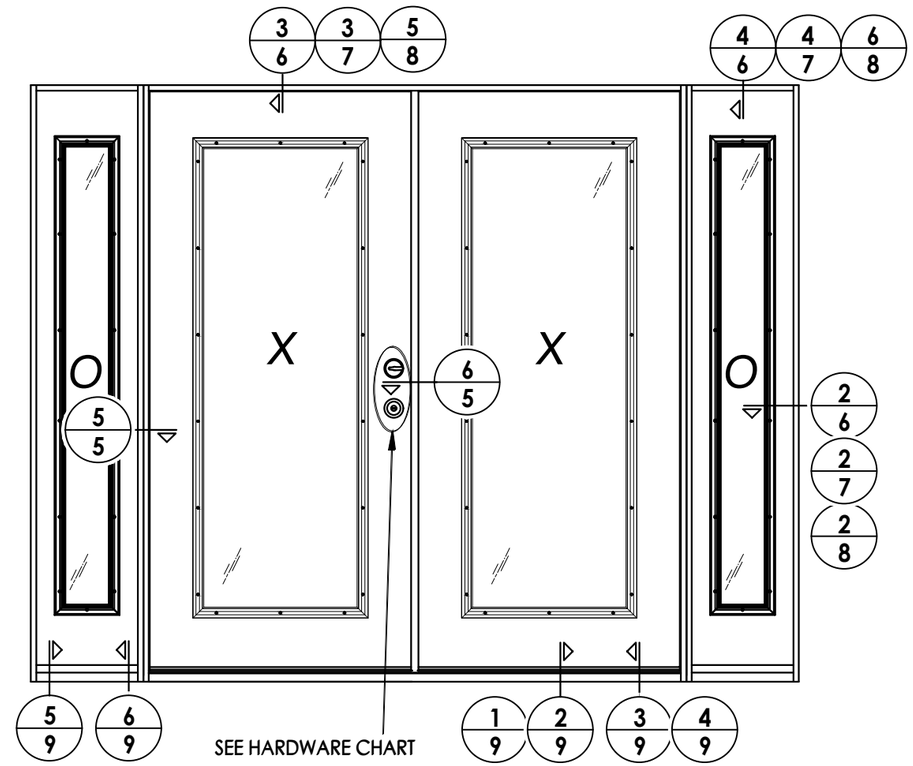

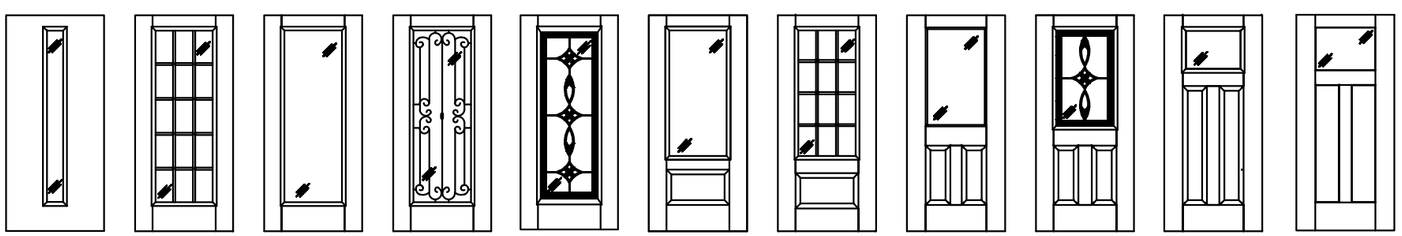

Fiber-Classic/Smooth-Star Door Panel Options

Products approved include all embossed panel doors and 2 panel recessed panel doors.
Similar glazed panel configurations are allowed.
Panels shown are for illustration and are representative only.

HARDWARE TABLE	
MANUFACTURER	**MODEL**
SCHLAGE	**KNOB:** **F51** **DEADBOLT:** **B60**
KWIKSET	**KNOB:** **SIGNATURE SERIES** **DEADBOLT:** **SIGNATURE SERIES (980)**
HOPPE (THERMA-TRU)	**MULTIPOINT : MPDGSB (3 pt. Manual Shootbolt)**

Documents Prepared By:
Lyndon F. Schmidt
P.E. No. 43409
RW BUILDING CONSULTANTS, INC.
P.O. Box 230, Valrico, FL 33595
Phone No.: 813.659.9197
FBPE Registry No. 9813

PRODUCT: *THERMA-TRU FIBERGLASS DOOR*

PART OR ASSEMBLY: *ELEVATIONS*

REVISIONS

NO.	DATE		BY
6	7/03/26	UPDATE TO 9TH ED. (2026) FBC	LFS
5	7/19/23	UPDATE TO 8TH ED. (2023) FBC	LFS
4	7/21/20	UPDATE TO 7th ED (2020) FBC	LFS

DATE: 6/1/16
SCALE: N.T.S.
DWG. BY: JK
CHK. BY: LFS
DRAWING NO.: FL-20461.11
SHEET 5 OF 15

© 2016 R.W. BUILDING CONSULTANTS INC.

Z:\2023 FBC Drawings\Therma-Tru\FL-20461 R10\FL-20461.9-13.dwg

Notes:
1. Sidelite assembly screws located 7" from top and 14" from bottom & 2 more screws equally spaced between (4 screws total per side jamb).
2. Sidelite assembly screws located 4" from each end (2 screws along head jamb).

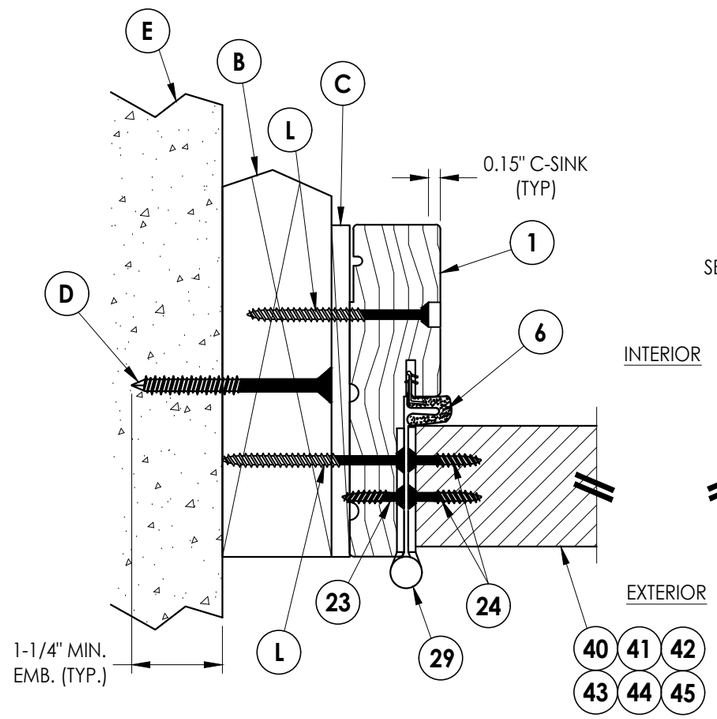

1/6 **HORIZONTAL CROSS SECTION**
Shown w/ 2X Buck
Outswing shown (Inswing similar)

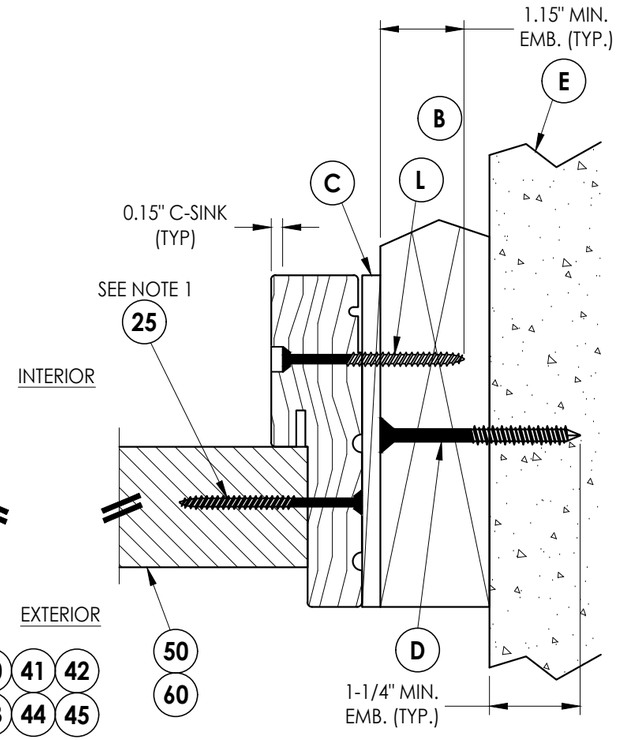

2/6 **HORIZONTAL CROSS SECTION**
Shown w/ 2X Buck
Outswing shown (Inswing similar)

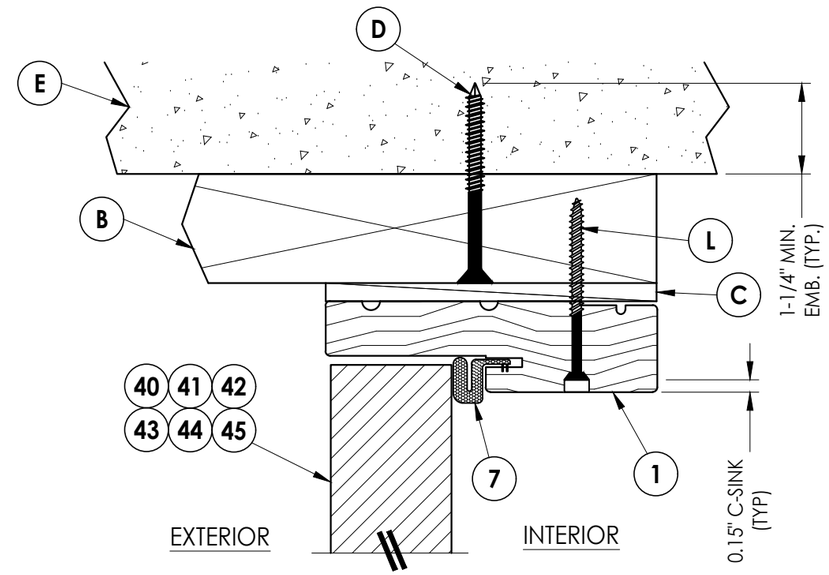

3/6 **VERTICAL CROSS SECTION**
Shown w/ 2X Buck
Outswing shown (Inswing similar)

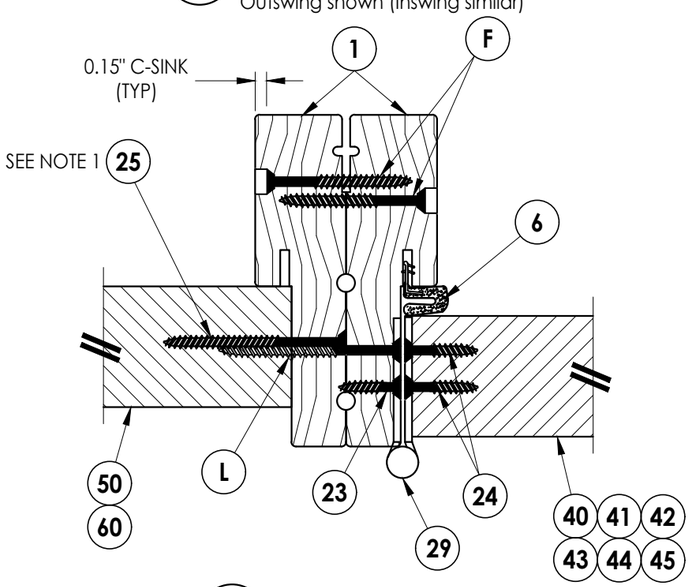

5/6 **HORIZONTAL CROSS SECTION**
Outswing shown (Inswing similar)

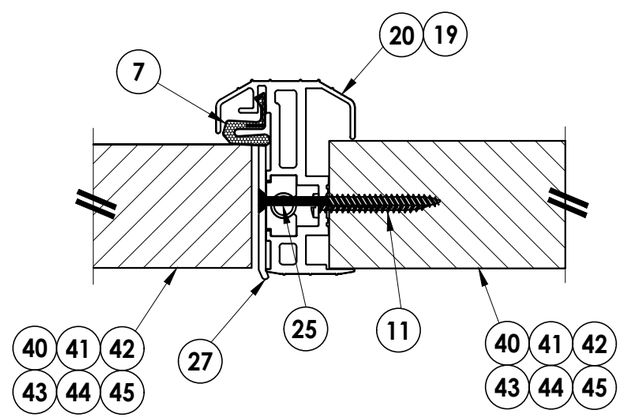

6/6 **HORIZONTAL CROSS SECTION**
Outswing shown (Inswing similar)

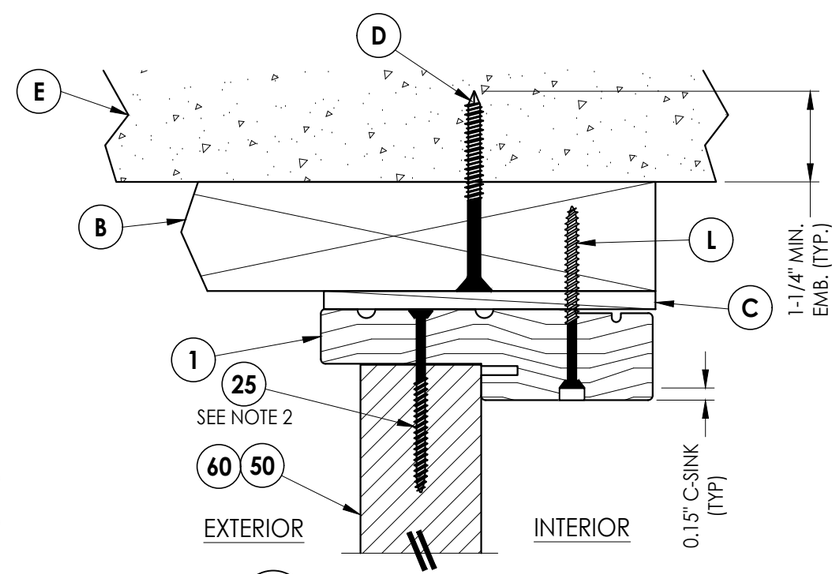

4/6 **VERTICAL CROSS SECTION**
Shown w/ 2X Buck
Outswing shown (Inswing similar)

Documents Prepared By:
Lyndon F. Schmidt
P.E. No. 43409

RW BUILDING CONSULTANTS, INC.
P.O. Box 230, Valrico, FL 33595
Phone No.: 813.659.9197
FBPE Registry No. 9813

PRODUCT: THERMA–TRU FIBERGLASS DOOR

PART OR ASSEMBLY: HORIZONTAL & VERTICAL CROSS SECTIONS (2X BUCK)

REVISIONS

NO.	DATE		BY
6	7/03/26	UPDATE TO 9TH ED. (2026) FBC	LFS
5	7/19/23	UPDATE TO 8TH ED. (2023) FBC	LFS
4	7/21/20	UPDATE TO 7th ED (2020) FBC	LFS

DATE: 6/1/16
SCALE: N.T.S.
DWG. BY: JK
CHK. BY: LFS
DRAWING NO.: FL–20461.11
SHEET 6 OF 15

© 2016 R.W. BUILDING CONSULTANTS INC.

Z:\2023 FBC Drawings\Therma-Tru\FL-20461 R10\FL-20461.9-13.dwg

Notes:
1. Sidelite assembly screws located 7" from top and 14" from bottom & 2 more screws equally spaced between (4 screws total per side jamb).
2. Sidelite assembly screws located 4" from each end (2 screws along head jamb).

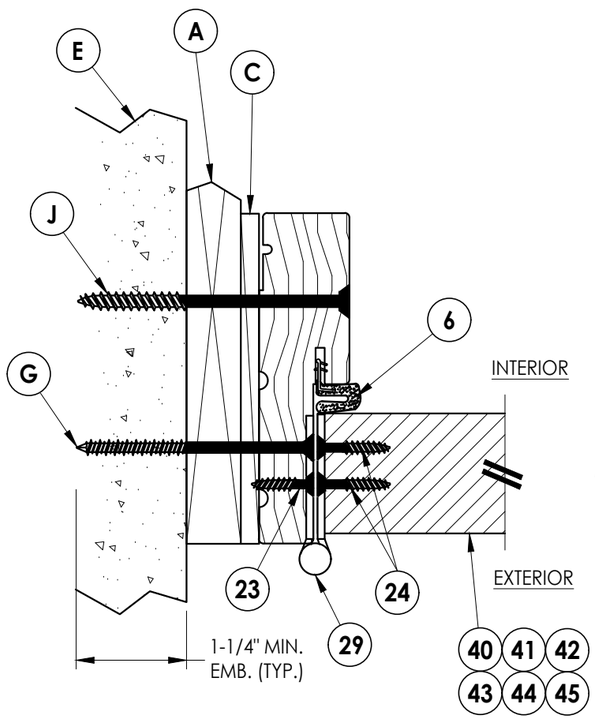

1/7 **HORIZONTAL CROSS SECTION**
Shown w/ 1X sub-buck
Outswing shown (Inswing similar)

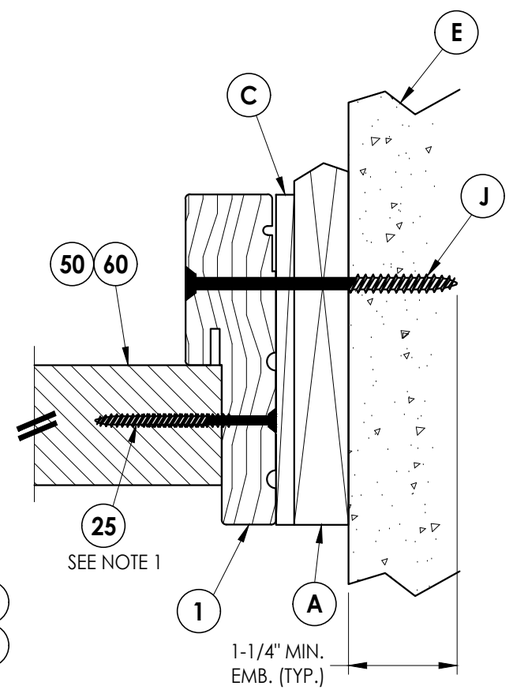

2/7 **HORIZONTAL CROSS SECTION**
Shown w/ 1X sub-buck
Outswing shown (Inswing similar)

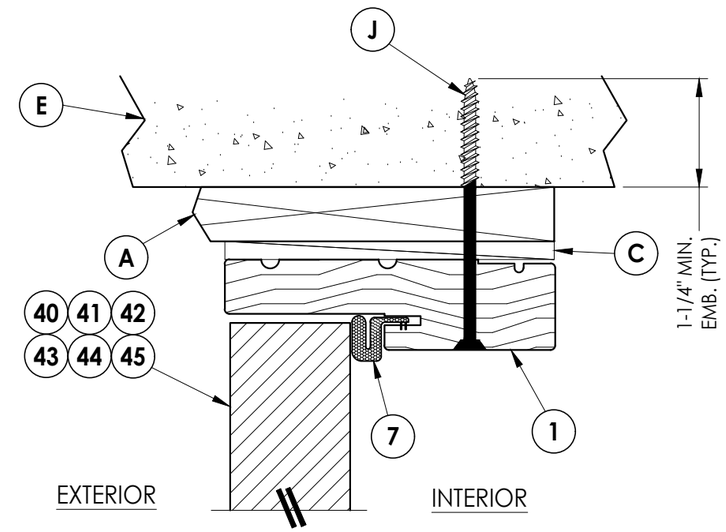

3/7 **VERTICAL CROSS SECTION**
Shown w/ 1X sub-buck
Outswing shown (Inswing similar)

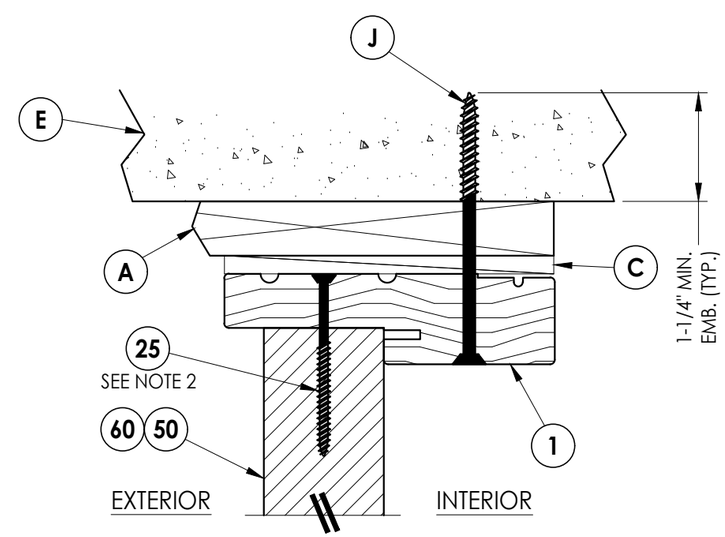

4/7 **VERTICAL CROSS SECTION**
Shown w/ 1X sub-buck
Outswing shown (Inswing similar)

Documents Prepared By:
Lyndon F. Schmidt
P.E. No. 43409

RW BUILDING CONSULTANTS, INC.
P.O. Box 230, Valrico, FL 33595
Phone No.: 813.659.9197
FBPE Registry No. 9813

PRODUCT: THERMA-TRU FIBERGLASS DOOR

PART OR ASSEMBLY: HORIZONTAL & VERTICAL CROSS SECTIONS (1X BUCK)

REVISIONS

NO.	DATE		BY
6	7/03/26	UPDATE TO 9TH ED. (2026) FBC	LFS
5	7/19/23	UPDATE TO 8TH ED. (2023) FBC	LFS
4	7/21/20	UPDATE TO 7th ED (2020) FBC	LFS

DATE: 6/1/16
SCALE: N.T.S.
DWG. BY: JK
CHK. BY: LFS
DRAWING NO.: FL-20461.11
SHEET 7 OF 15

© 2016 R.W. Building Consultants Inc.

Z:\2023 FBC Drawings\Therma-Tru\FL-20461 R10\FL-20461.9-13.dwg

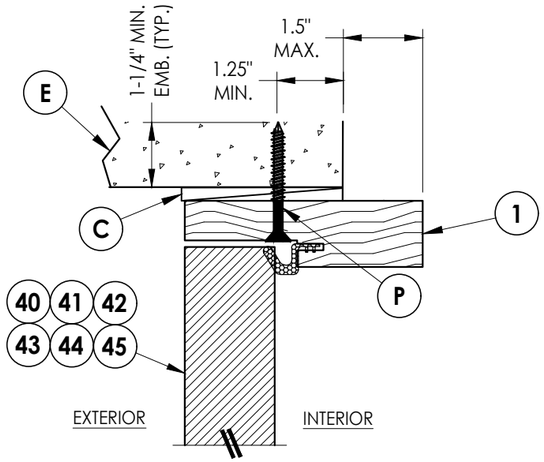

3/8 VERTICAL CROSS SECTION
Shown Direct to Masonry
Outswing only w/ 4-9/16" jamb
Double Door Only (N/A w/ Sidelites)

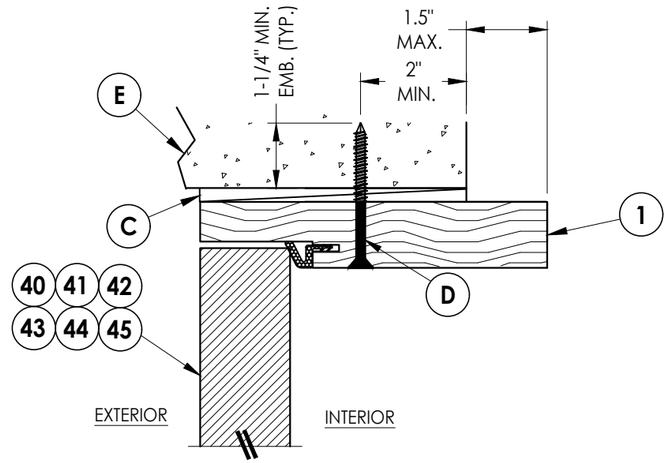

5/8 VERTICAL CROSS SECTION
Shown Direct to Masonry
Outswing only w/ 6-9/16" jamb

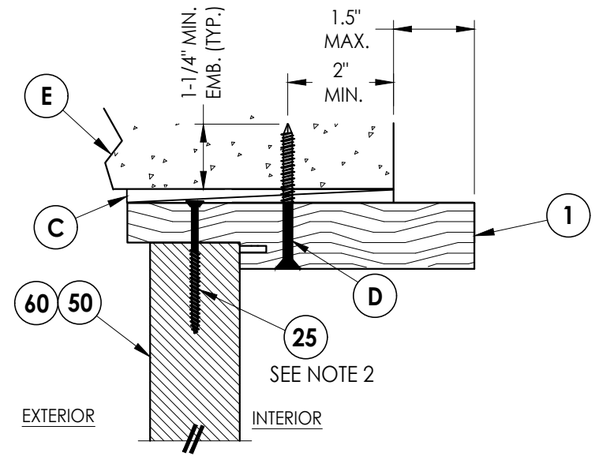

6/8 VERTICAL CROSS SECTION
Shown Direct to Masonry
Outswing only w/ 6-9/16" jamb

Notes:
1. Sidelite assembly screws located 7" from top and 14" from bottom & 2 more screws equally spaced between (4 screws total per side jamb).
2. Sidelite assembly screws located 4" from each end (2 screws along head jamb).

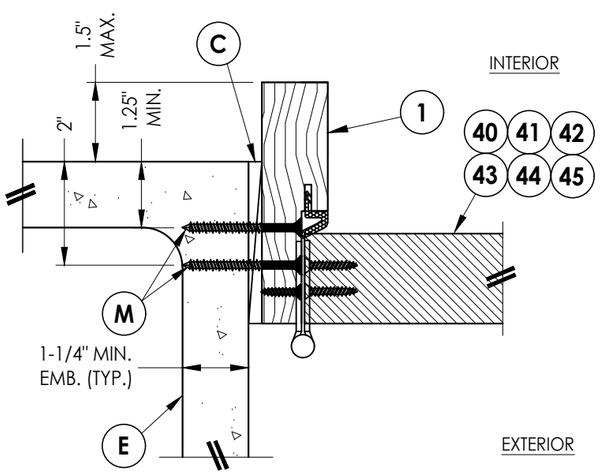

1/8 HORIZONTAL CROSS SECTION
Shown Direct to Masonry
Outswing only w/ 4-9/16" jamb
Double Door Only (N/A w/ Sidelites)

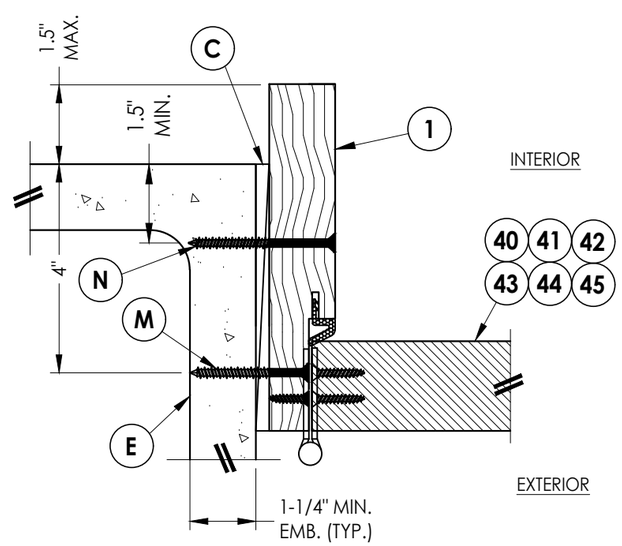

4/8 HORIZONTAL CROSS SECTION
Shown Direct to Masonry
Outswing only w/ 6-9/16" jamb

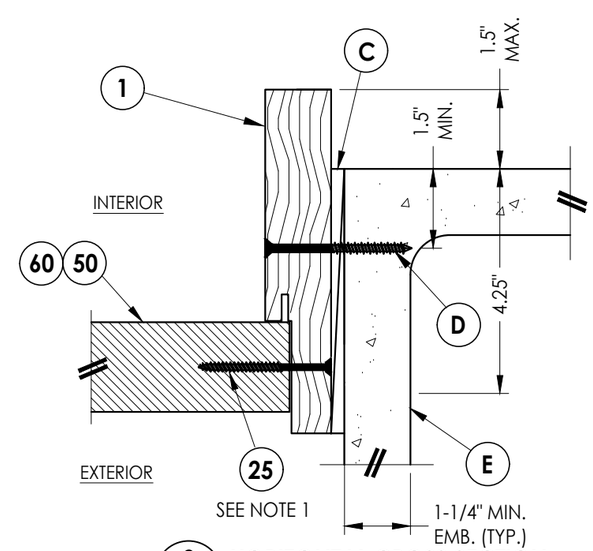

2/8 HORIZONTAL CROSS SECTION
Shown Direct to Masonry
Outswing only w/ 6-9/16" jamb

Documents Prepared By:
Lyndon F. Schmidt
P.E. No. 43409
RW BUILDING CONSULTANTS, INC.
P.O. Box 230, Valrico, FL 33595
Phone No.: 813.659.9197
FBPE Registry No. 9813

PRODUCT: *THERMA–TRU FIBERGLASS DOOR*

PART OR ASSEMBLY: *HORIZONTAL & VERTICAL SECTIONS (DIRECT TO MASONRY)*

REVISIONS

NO.	DATE		BY
6	7/03/26	UPDATE TO 9TH ED. (2026) FBC	LFS
5	7/19/23	UPDATE TO 8TH ED. (2023) FBC	LFS
4	7/21/20	UPDATE TO 7th ED (2020) FBC	LFS

DATE: 6/1/16
SCALE: N.T.S.
DWG. BY: JK
CHK. BY: LFS
DRAWING NO.: FL–20461.11
SHEET 8 OF 15

© 2016 R.W. Building Consultants Inc.

Z:\2023 FBC Drawings\Therma-Tru\FL-20461 R10\FL-20461.9-13.dwg

Notes:
1. Sill Item #'s 17, 18, 32, 34, 35, 36, 37, 38 & 39 are attached to jambs w/ (3) #8 X 2-1/2" pfh screws at each end.
   Sill Item #'s 16 & 33 are attached to jambs w/ (2) #8 X 2-1/2" pfh screws at each end.
   Sill Item #15 is attached to jambs utilizing (2) #10 X 2" pph SMS at each end.
2. Sidelite assembly screws located 4" from each end (2 screws along sill).

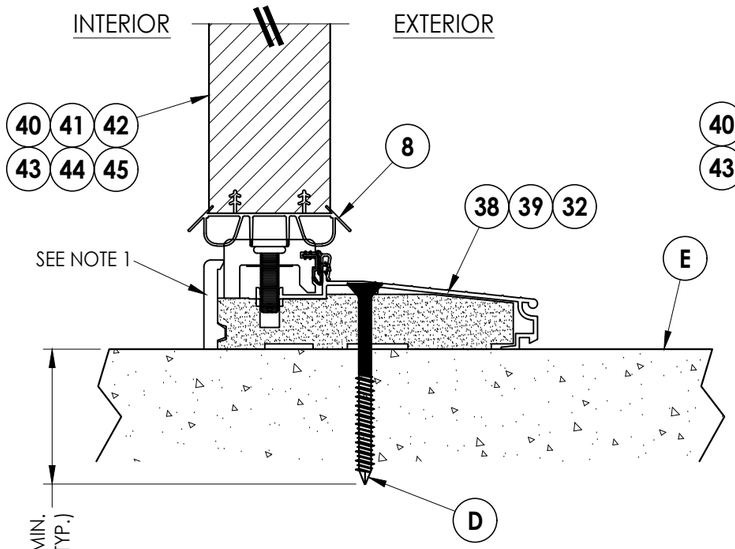

1/9 **VERTICAL CROSS SECTION**
Inswing Sill

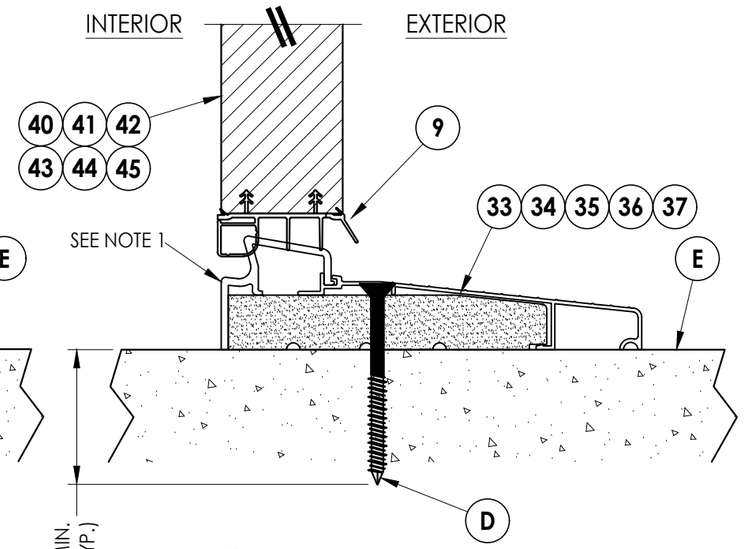

2/9 **VERTICAL CROSS SECTION**
Inswing Sill

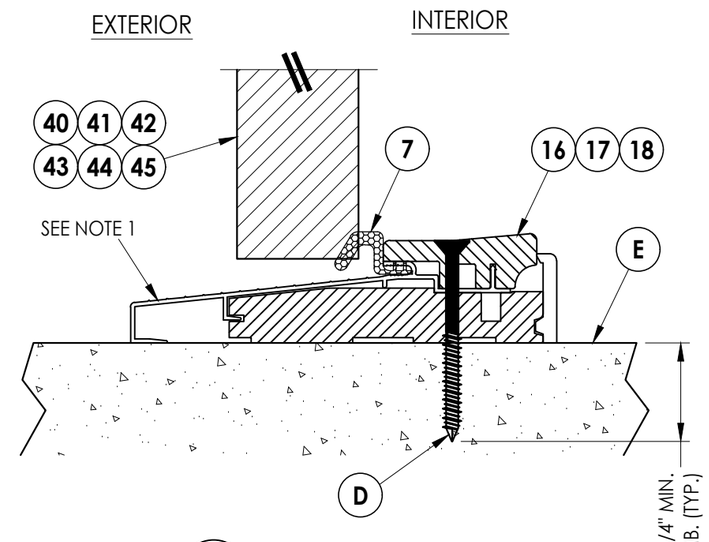

3/9 **VERTICAL CROSS SECTION**
Outswing Sill

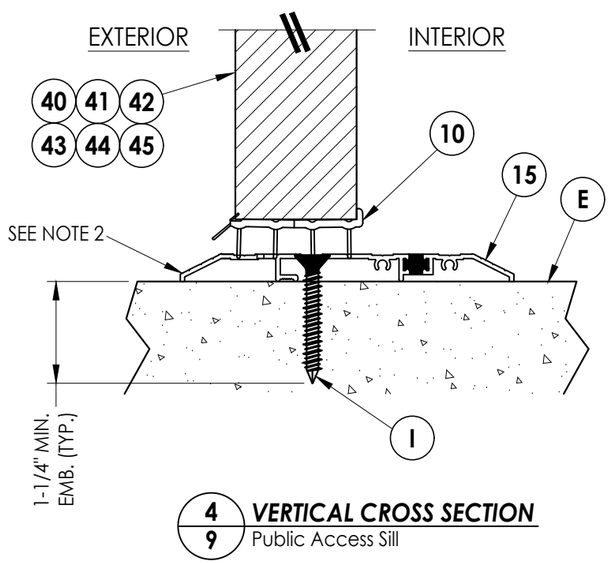

4/9 **VERTICAL CROSS SECTION**
Public Access Sill

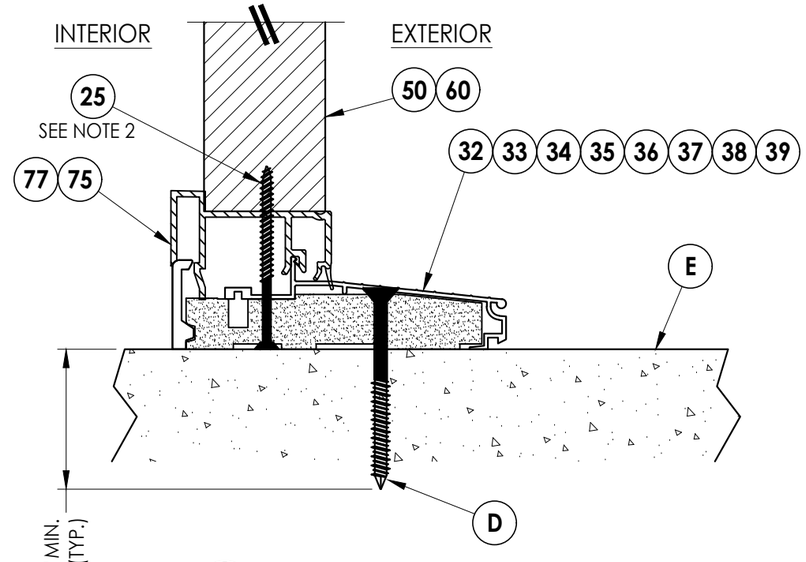

5/9 **VERTICAL CROSS SECTION**
Inswing Sill

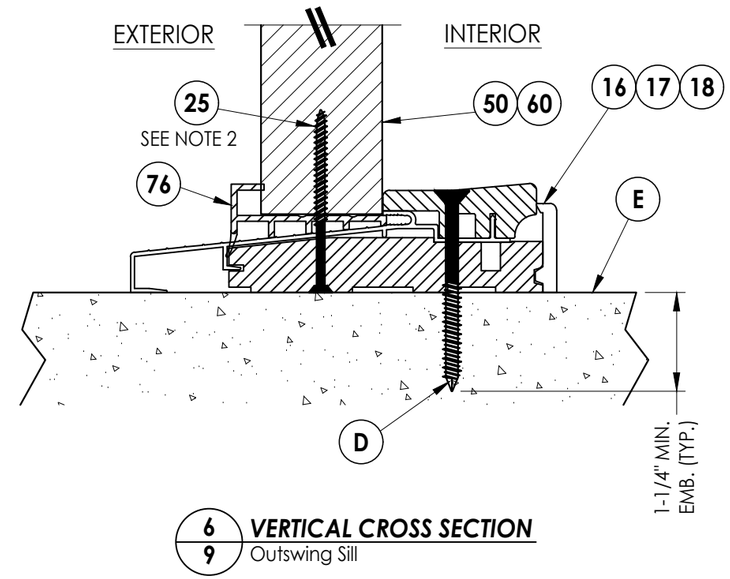

6/9 **VERTICAL CROSS SECTION**
Outswing Sill

Documents Prepared By:
Lyndon F. Schmidt
P.E. No. 43409
R.W. BUILDING CONSULTANTS, INC.
P.O. Box 230, Valrico, FL 33595
Phone No.: 813.659.9197
FBPE Registry No. 9813

PRODUCT: *THERMA-TRU FIBERGLASS DOOR*

PART OR ASSEMBLY: *VERTICAL CROSS SECTIONS (THRESHOLDS)*

REVISIONS

NO.	DATE		BY
6	7/03/26	UPDATE TO 9TH ED. (2026) FBC	LFS
5	7/19/23	UPDATE TO 8TH ED. (2023) FBC	LFS
4	7/21/20	UPDATE TO 7th ED (2020) FBC	LFS

DATE: 6/1/16
SCALE: N.T.S.
DWG. BY: JK
CHK. BY: LFS
DRAWING NO.: FL-20461.11
SHEET 9 OF 15

© 2016 R.W. BUILDING CONSULTANTS INC.

Z:\2023 FBC Drawings\Therma-Tru\FL-20461 R10\FL-20461.9-13.dwg

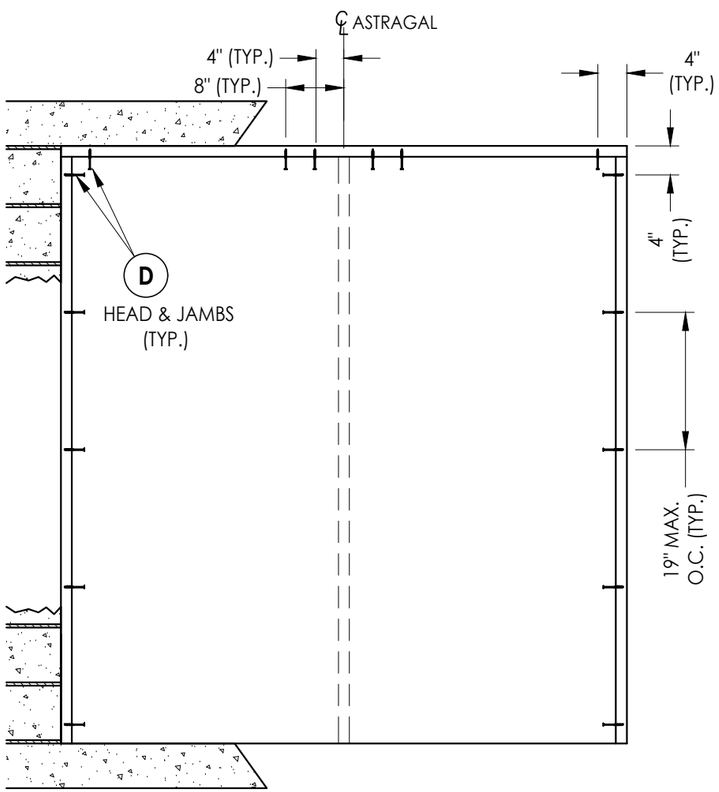

XX

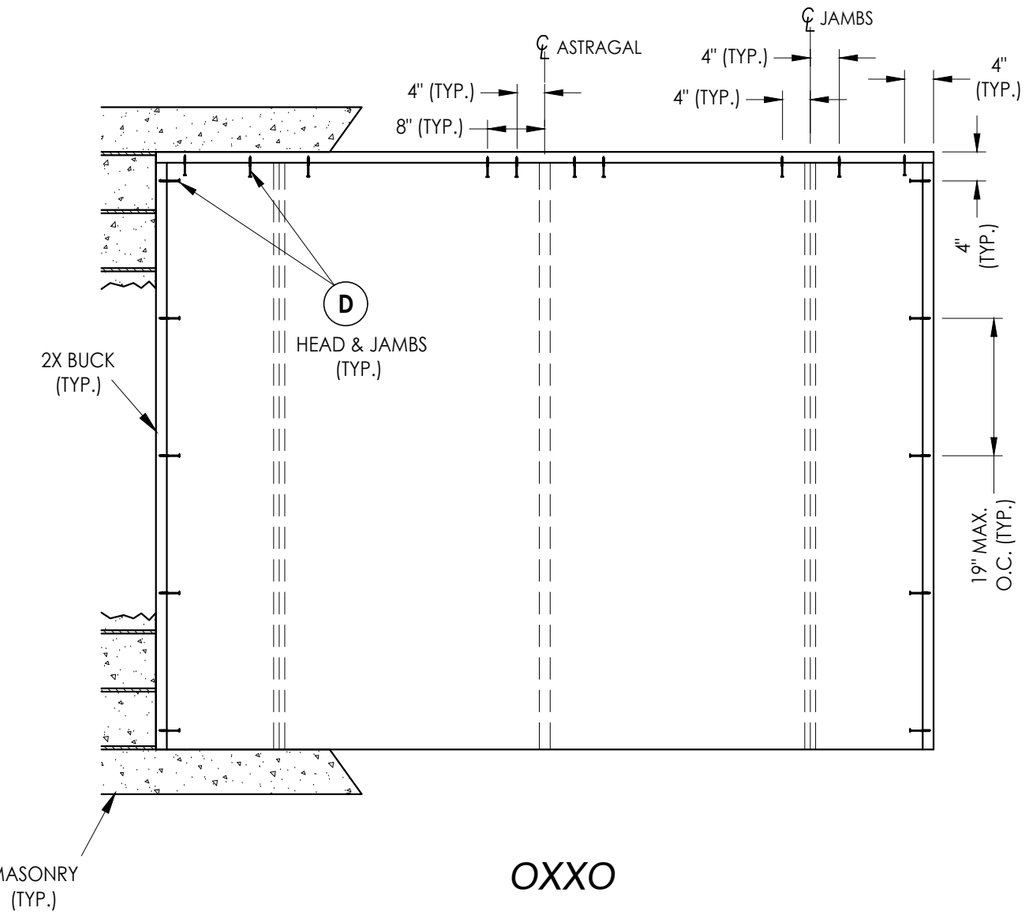

OXXO

2X BUCK ANCHORING

Documents Prepared By:
Lyndon F. Schmidt
P.E. No. 43409

RW BUILDING CONSULTANTS, INC.
P.O. Box 230, Valrico, FL 33595
Phone No.: 813.659.9197
FBPE Registry No. 9813

PRODUCT: THERMA-TRU FIBERGLASS DOOR

PART OR ASSEMBLY: BUCK ANCHORING

REVISIONS

NO.	DATE		BY
6	7/03/26	UPDATE TO 9TH ED. (2026) FBC	LFS
5	7/19/23	UPDATE TO 8TH ED. (2023) FBC	LFS
4	7/21/20	UPDATE TO 7th ED (2020) FBC	LFS

DATE: 6/1/16
SCALE: N.T.S.
DWG. BY: JK
CHK. BY: LFS
DRAWING NO.: FL-20461.11
SHEET 10 OF 15

© 2016 R.W. Building Consultants Inc.

Z:\2023 FBC Drawings\Therma-Tru\FL-20461 R10\FL-20461.9-13.dwg

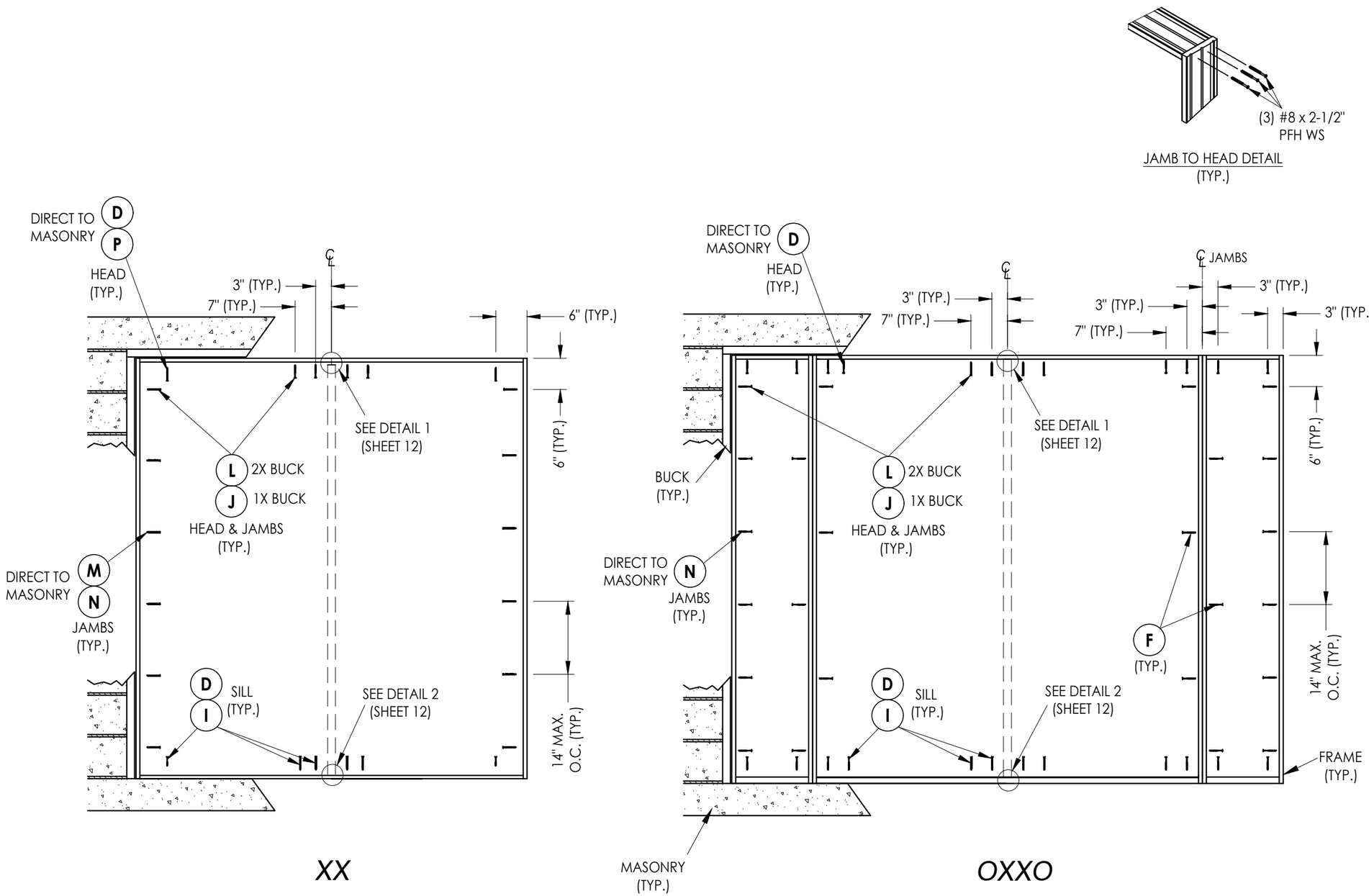

FRAME ANCHORING

Documents Prepared By:
Lyndon F. Schmidt
P.E. No. 43409

R.W. BUILDING CONSULTANTS, INC.
P.O. Box 230, Valrico, FL 33595
Phone No.: 813.659.9197
FBPE Registry No. 9813

PRODUCT: THERMA-TRU FIBERGLASS DOOR

PART OR ASSEMBLY: FRAME ANCHORING

REVISIONS

NO.	DATE		BY
6	7/03/26	UPDATE TO 9TH ED. (2026) FBC	LFS
5	7/19/23	UPDATE TO 8TH ED. (2023) FBC	LFS
4	7/21/20	UPDATE TO 7th ED (2020) FBC	LFS

DATE: 6/1/16
SCALE: N.T.S.
DWG. BY: JK
CHK. BY: LFS
DRAWING NO.: FL-20461.11
SHEET 11 OF 15

© 2016 R.W. Building Consultants Inc.

Z:\2023 FBC Drawings\Therma-Tru\FL-20461 R10\FL-20461.9-13.dwg

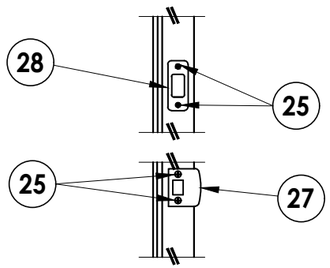

LATCH & DEADBOLT DETAIL
Schlage / Kwikset

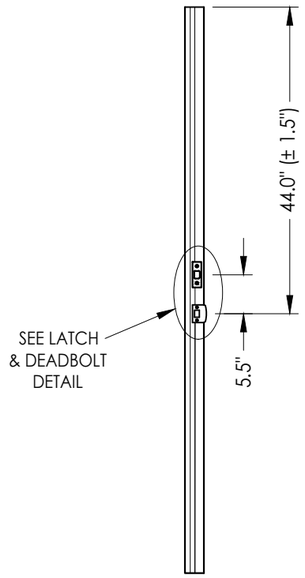

ASTRAGAL
Latch and Deadbolt

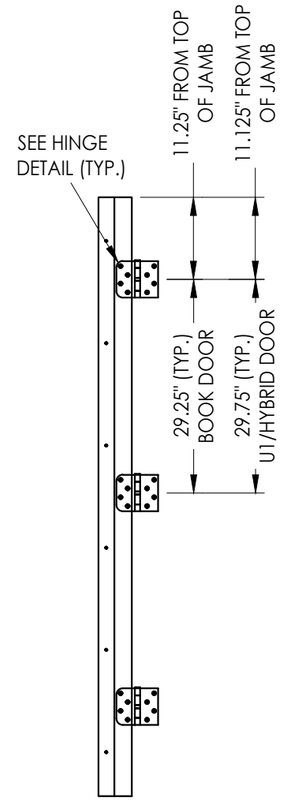

HINGE JAMB

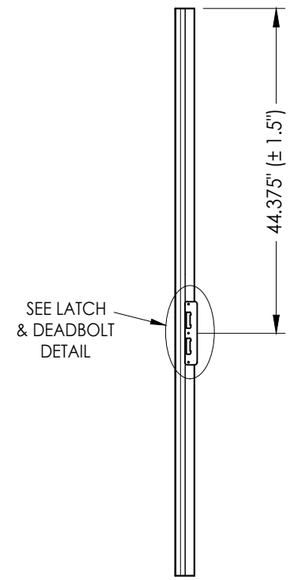

ASTRAGAL
Multipoint Lock

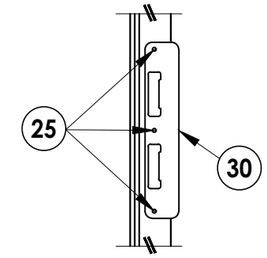

LATCH & DEADBOLT DETAIL
Multipoint Lock

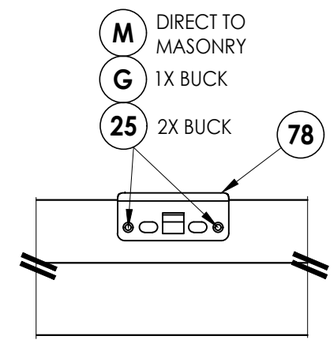

DETAIL 1
Multipoint Lock Strike Plate @ Head

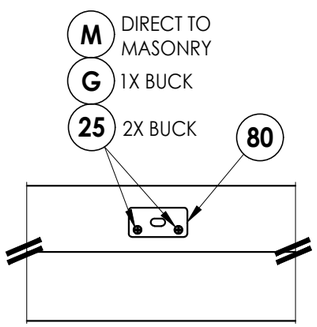

DETAIL 1
Coastal Astragal Strike Plate @ Head

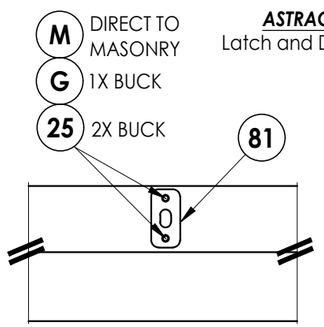

DETAIL 1
Standard Astragal Strike Plate @ Head

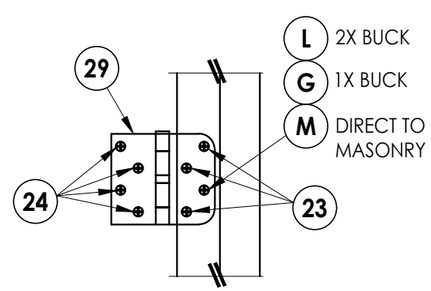

HINGE DETAIL

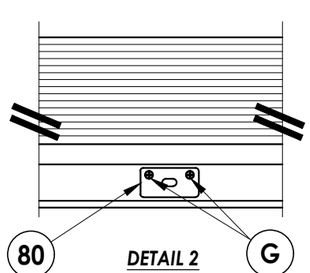

DETAIL 2
Inswing
Coastal Astragal Strike Plate @ Sill

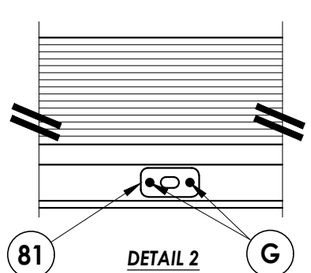

DETAIL 2
Inswing
Standard Astragal Strike Plate @ Sill

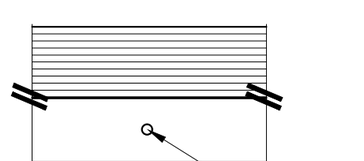

DETAIL 2
Outswing
Astragal Bolt Hole @ Sill

LATCH & DEADBOLT STRIKE DETAILS

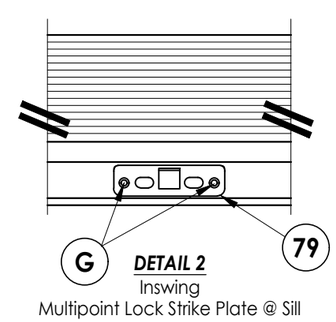

DETAIL 2
Inswing
Multipoint Lock Strike Plate @ Sill

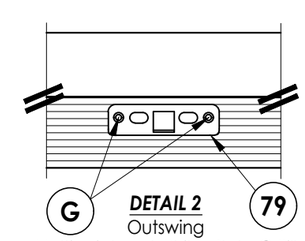

DETAIL 2
Outswing
Multipoint Lock Strike Plate @ Sill

MULTIPOINT LOCK STRIKE DETAILS

Documents Prepared By:
Lyndon F. Schmidt
P.E. No. 43409
RW BUILDING CONSULTANTS, INC.
P.O. Box 230, Valrico, FL 33595
Phone No.: 813.659.9197
FBPE Registry No. 9813

PRODUCT: THERMA-TRU FIBERGLASS DOOR

PART OR ASSEMBLY: HARDWARE DETAILS

REVISIONS

NO.	DATE	BY
6	7/03/26	UPDATE TO 9TH ED. (2026) FBC	LFS
5	7/19/23	UPDATE TO 8TH ED. (2023) FBC	LFS
4	7/21/20	UPDATE TO 7th ED (2020) FBC	LFS

DATE: 6/1/16
SCALE: N.T.S.
DWG. BY: JK
CHK. BY: LFS
DRAWING NO.: FL-20461.11
SHEET 12 OF 15

© 2016 R.W. Building Consultants Inc.

Z:\2023 FBC Drawings\Therma-Tru\FL-20461 R10\FL-20461.9-13.dwg

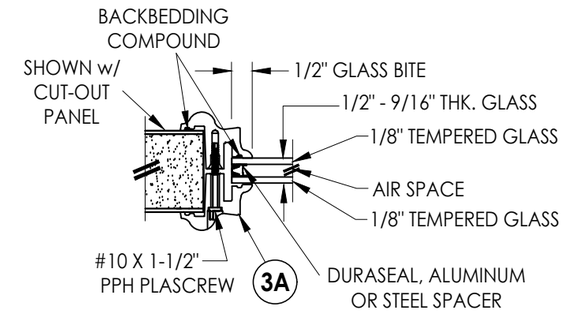

G1 GLAZING DETAIL
BTS Lite Frame
Door Panels & Sidelites

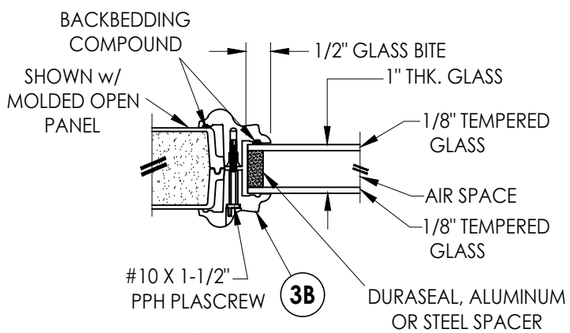

G2 GLAZING DETAIL
BTS Lite Frame
Door Panels & Sidelites

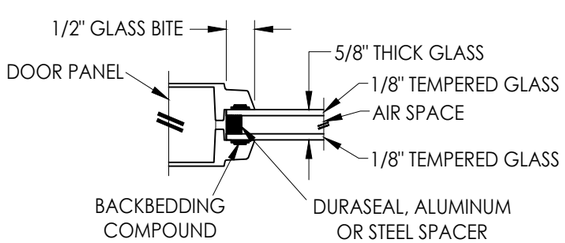

G3 GLAZING DETAIL
Flush Glazing
Door Panels

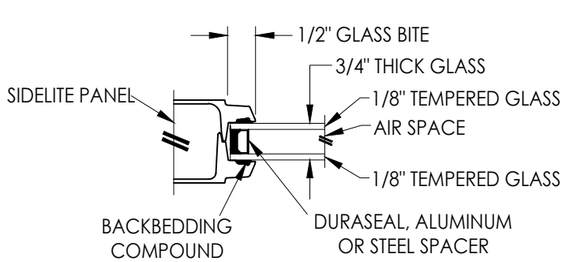

G4 GLAZING DETAIL
Flush Glazing
Sidelites

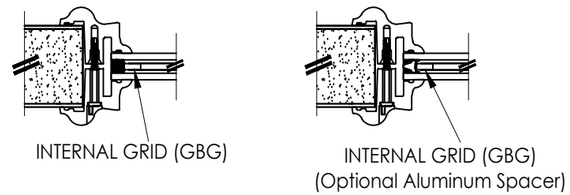

9/16" INSULATED GLASS INSERT OPTIONS

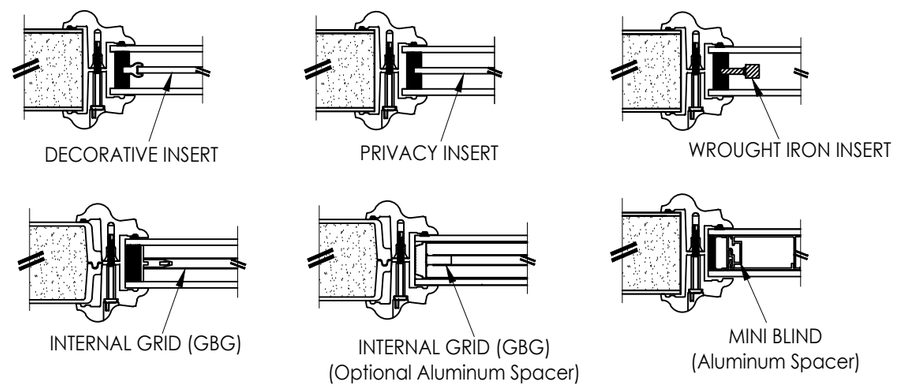

1" INSULATED GLASS INSERT OPTIONS

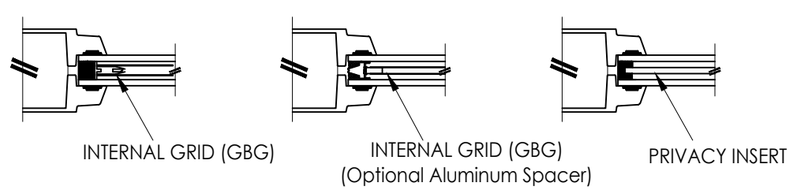

5/8" INSULATED GLASS INSERT OPTIONS

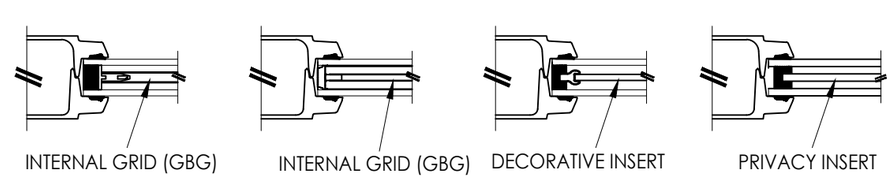

3/4" INSULATED GLASS INSERT OPTIONS

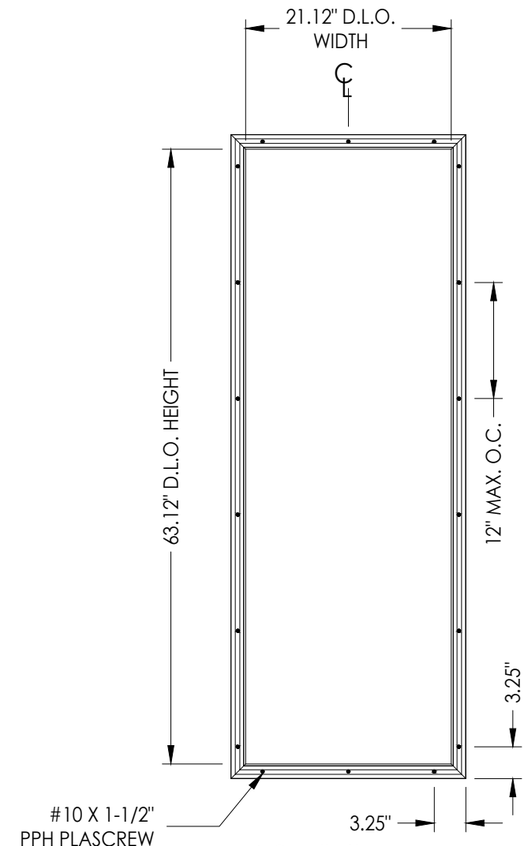

BTS Full Lite Frame

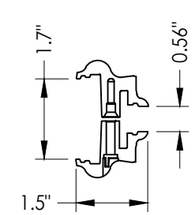

3A BTS LITE FRAME
1/2" & 9/16" Glazing

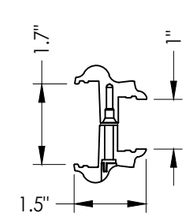

3B BTS LITE FRAME
1" Glazing

Documents Prepared By:
Lyndon F. Schmidt
P.E. No. 43409
R.W. BUILDING CONSULTANTS, INC.
P.O. Box 230, Valrico, FL 33595
Phone No.: 813.659.9197
FBPE Registry No. 9813

PRODUCT: THERMA-TRU FIBERGLASS DOOR

PART OR ASSEMBLY: GLAZING DETAILS

REVISIONS

NO.	DATE		BY
6	7/03/26	UPDATE TO 9TH ED. (2026) FBC	LFS
5	7/19/23	UPDATE TO 8TH ED. (2023) FBC	LFS
4	7/21/20	UPDATE TO 7th ED (2020) FBC	LFS

DATE: 6/1/16
SCALE: N.T.S.
DWG. BY: JK
CHK. BY: LFS
DRAWING NO.: FL-20461.11
SHEET 13 OF 15

© 2016 R.W. Building Consultants Inc.

Z:\2023 FBC Drawings\Therma-Tru\FL-20461 R10\FL-20461.9-13.dwg

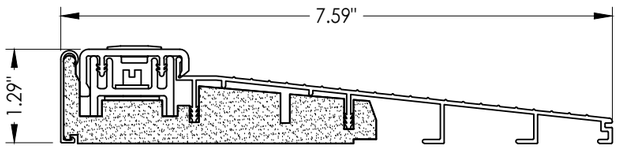

32 ***INSWING THRESHOLD***
Inswing Basic Composite Adjustable Sill 7-1/2"

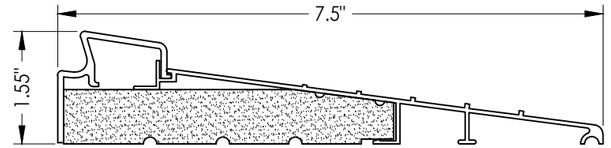

37 ***INSWING THRESHOLD***
Inswing Basic Fixed 7-1/2" Sill

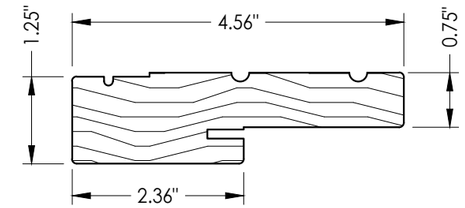

1 ***WOOD JAMB***

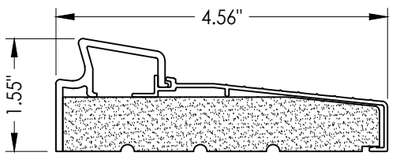

33 ***INSWING THRESHOLD***
Inswing Basic Fixed Sill

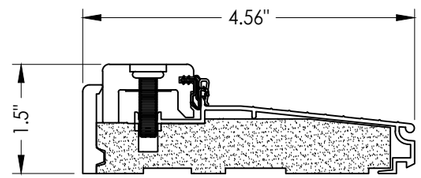

38 ***INSWING THRESHOLD***
Inswing Composite Adjustable Sill

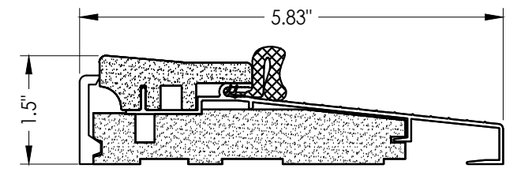

16 ***OUTSWING THRESHOLD***
Composite Sill

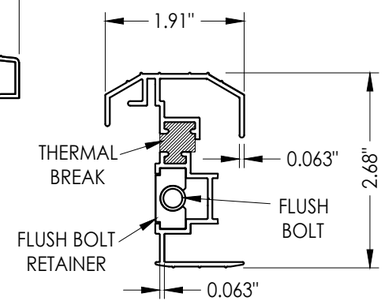

19 ***STANDARD ALUMINUM ASTRAGAL***

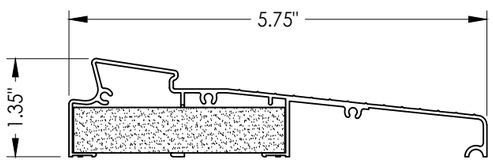

34 ***INSWING THRESHOLD***
Inswing Moderate Climate Sill 1-3/8"

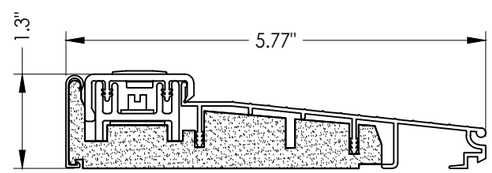

39 ***INSWING THRESHOLD***
Inswing Basic Composite Adjustable Sill

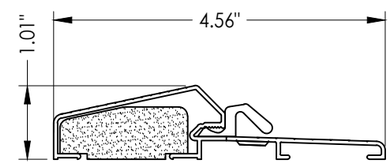

17 ***OUTSWING THRESHOLD***
Composite / Aluminum Sill

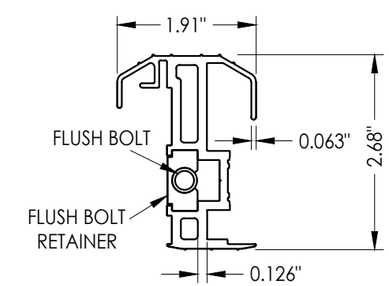

20 ***COASTAL ALUMINUM ASTRAGAL***

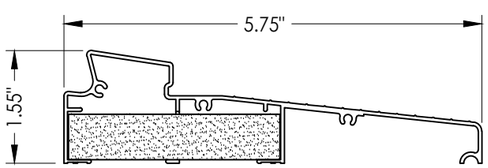

35 ***INSWING THRESHOLD***
Inswing Moderate Climate Sill

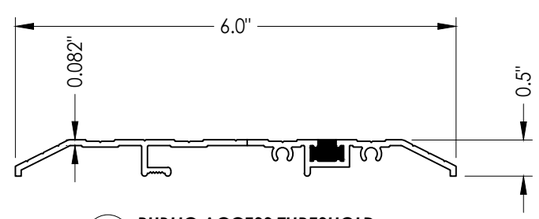

15 ***PUBLIC ACCESS THRESHOLD***

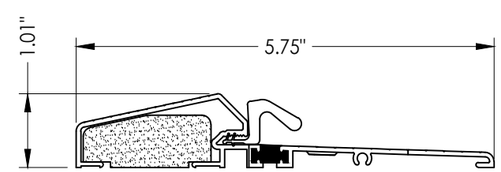

18 ***OUTSWING THRESHOLD***
Composite / Aluminum Sill
(Thermal Break)

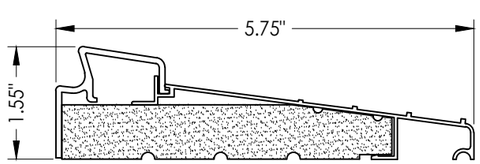

36 ***INSWING THRESHOLD***
Inswing Basic Fixed 5-3/4" Sill

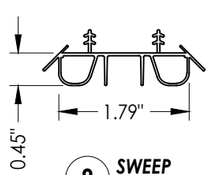

8 ***SWEEP***

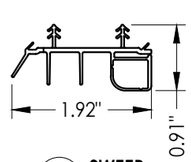

9 ***SWEEP***

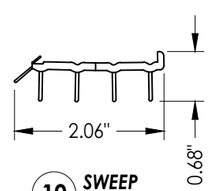

10 ***SWEEP***

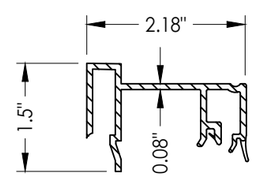

75 ***SIDELITE SPACER***
Inswing

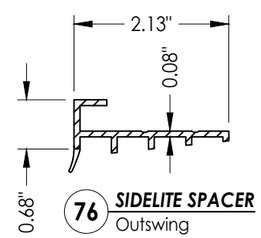

76 ***SIDELITE SPACER***
Outswing

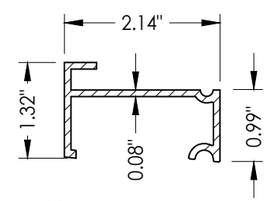

77 ***SIDELITE SPACER***
Inswing
Moderate Climate Threshold

Documents Prepared By:
Lyndon F. Schmidt
P.E. No. 43409

RW BUILDING CONSULTANTS, INC.
P.O. Box 230, Valrico, FL 33595
Phone No.: 813.659.9197
FBPE Registry No. 9813

PRODUCT: *THERMA–TRU FIBERGLASS DOOR*

PART OR ASSEMBLY: *COMPONENTS*

REVISIONS

NO.	DATE	BY
6	7/03/26 UPDATE TO 9TH ED. (2026)	FBC LFS
5	7/19/23 UPDATE TO 8TH ED. (2023)	FBC LFS
4	7/21/20 UPDATE TO 7th ED (2020)	FBC LFS

DATE: 6/1/16
SCALE: N.T.S.
DWG. BY: JK
CHK. BY: LFS
DRAWING NO.: FL–20461.11
SHEET 14 OF 15

© 2016 R.W. BUILDING CONSULTANTS INC.

Z:\2023 FBC Drawings\Therma-Tru\FL-20461 R10\FL-20461.9-13.dwg

BILL OF MATERIALS

ITEM #	DESCRIPTION	MATERIAL
A	1X BUCK (SG >= 0.42)	WOOD
B	2X BUCK (SG >= 0.42)	WOOD
C	1/4" MAX. SHIM SPACE	-
D	1/4" X 2-3/4" PFH DeWALT OR ITW CONCRETE SCREW	STEEL
E	MASONRY - 3,000 PSI MIN. CONCRETE CONFORMING TO ACI 301 OR HOLLOW BLOCK CONFORMING TO ASTM C90	CONCRETE
F	#10 X 2" PFH WOOD SCREW	STEEL
G	3/16" X 3-1/4" ITW CONCRETE SCREW	STEEL
I	1/4" X 1-3/4" PFH DeWALT OR ITW CONCRETE SCREW	STEEL
J	1/4" X 3-3/4" PFH DeWALT OR ITW CONCRETE SCREW	STEEL
L	#10 X 2-1/2" PFH WOOD SCREW (1.15" MIN. EMBEDMENT)	STEEL
M	3/16" X 2-1/4" ITW CONCRETE SCREW	STEEL
N	3/16" X 2-3/4" ITW CONCRETE SCREW	STEEL
P	1/4" X 2-3/4" PFH DeWALT CONCRETE SCREW	STEEL
1	JAMB (FINGER JOINT PINE)	WOOD
6	WEATHERSTRIP (MEDIUM REACH)	FOAM
7	WEATHERSTRIP (LONG REACH)	FOAM
8	SWEEP	VINYL
9	SWEEP (USE w/ MODERATE CLIMATE THRESHOLD)	VINYL
10	SWEEP (USE w/ PUBLIC ACCESS THRESHOLD)	VINYL
11	#10 X 1-3/4" PFH WOOD SCREW	STEEL
15	PUBLIC ACCESS THRESHOLD	ALUM
16	OUTSWING THRESHOLD	ALUM/COMP
17	OUTSWING THRESHOLD	ALUM/COMP
18	OUTSWING THRESHOLD	ALUM/COMP
19	STANDARD ALUMINUM ASTRAGAL	ALUM
20	COASTAL ALUMINUM ASTRAGAL	ALUM
23	#10 x 3/4" PFH WOOD SCREW	STEEL
24	#10 x 1" PFH WOOD SCREW	STEEL
25	#8 x 2-1/2" PFH WOOD SCREW	STEEL
26	#8 x 5/8" PFH WOOD SCREW	STEEL
27	LATCH STRIKE PLATE	STEEL
28	DEADBOLT STRIKE PLATE	STEEL
29	4" X 4" HINGE	STEEL

BILL OF MATERIALS

ITEM #	DESCRIPTION	MATERIAL
32	INSWING THRESHOLD	ALUM/COMP
33	INSWING THRESHOLD	ALUM/COMP
34	INSWING THRESHOLD	ALUM/COMP
35	INSWING THRESHOLD	ALUM/COMP
36	INSWING THRESHOLD	ALUM/COMP
37	INSWING THRESHOLD	ALUM/COMP
38	INSWING THRESHOLD	ALUM/COMP
39	INSWING THRESHOLD	ALUM/COMP
40	DOOR PANEL (BOOK)	-
41	DOOR PANEL (HYBRID)	-
42	DOOR PANEL (U1)	-
43	FLUSH GLAZED DOOR PANEL (BOOK)	-
44	FLUSH GLAZED DOOR PANEL (HYBRID)	-
45	FLUSH GLAZED DOOR PANEL (U1)	-
50	SIDELITE (FULL LITE)	-
60	SIDELITE (HALF LITE)	-
75	SIDELITE SPACER (INSWING)	PVC
76	SIDELITE SPACER (OUTSWING)	PVC
77	SIDELITE SPACER (INSWING) - MODERATE CLIMATE SILL	PVC
78	MULTIPOINT LOCK STRIKE PLATE @ HEAD	STEEL
79	MULTIPOINT LOCK STRIKE PLATE @ SILL	STEEL
80	COASTAL ASTRAGAL STRIKE PLATE	STEEL
81	STANDARD ASTRAGAL STRIKE PLATE	STEEL

CONCRETE ANCHOR NOTES:

1. *Concrete anchor locations at the corners may be adjusted to maintain the min. edge distance to mortar joints.*
2. *Concrete anchor locations noted as "MAX. ON CENTER" must be adjusted to maintain the min. edge distance to mortar joints, additional concrete anchors may be required to ensure the "MAX. ON CENTER" dimension are not exceeded.*
3. *Concrete anchor table:*

ANCHOR TYPE	ANCHOR SIZE	MIN. EMBEDMENT	MIN. CLEARANCE TO MASONRY EDGE	MIN. CLEARANCE TO ADJACENT ANCHOR
ITW TAPCON®	1/4"	1-1/4"	2"	4"
DeWALT ULTRACON+®	1/4"	1-1/4"	1"	4"
ITW TAPCON®	3/16"	1-1/4"	AS SHOWN	1-1/2"

WOOD SCREW INSTALLATION NOTES:

1. *Maintain a minimum 5/8" edge distance, 1" end distance, & 1" o.c. spacing of wood screws to prevent the splitting of wood.*

CORROSION RESISTANCE - SALTWATER ENVIRONMENTS
Fasteners & connectors in areas within 3000 ft (914 m) of a saltwater coastline shall comply with FBC Sections 1711.1 or R332.1.

Documents Prepared By:
Lyndon F. Schmidt
P.E. No. 43409
R.W. BUILDING CONSULTANTS, INC.
P.O. Box 230, Valrico, FL 33595
Phone No.: 813.659.9197
FBPE Registry No. 9813

PRODUCT: THERMA-TRU FIBERGLASS DOOR

PART OR ASSEMBLY: BILL OF MATERIALS

NO.	DATE	REVISIONS	BY
6	7/03/26	UPDATE TO 9TH ED. (2026) FBC	LFS
5	7/19/23	UPDATE TO 8TH ED. (2023) FBC	LFS
4	7/21/20	UPDATE TO 7th ED (2020) FBC	LFS

DATE: 6/1/16
SCALE: N.T.S.
DWG. BY: JK
CHK. BY: LFS
DRAWING NO.: FL-20461.11
SHEET 15 OF 15

© 2016 R.W. BUILDING CONSULTANTS INC.

Z:\2023 FBC Drawings\Therma-Tru\FL-20461 R10\FL-20461.9-13.dwg